Research paper

Defective Barrier on Voltage Optimization for Small Airgap

John Tarilanyo Afa

Department of Electrical Engineering, Rivers State University of Science and Technology, Nkpolu, Port Harcourt

ABSTRACT

Aim: Considerable influence which barrier exerts on breakdown in a gaseous medium is related to the change of volume charges created during the process of development of ionization. Defective barrier when present in gaseous medium may affect the volume charge distribution in the medium, therefore will affect the optimum breakdown voltage.

The experiment is to investigate the effect of defective barrier on the optimum breakdown voltage, using positive and negative needle electrodes in an air medium of 10cm gap distance.

Methodology: The barriers for the tests were placed at 3cm from the point electrode for each test. The defective barriers were created by having holes of 6mm, 8mm, 12mm and 20mm diameter at the centre of the barrier. For each barrier position the breakdown test for positive and negative polarity test for needle electrodes were carried out.

Result: From the test without barrier the negative point electrode offered higher breakdown voltage (1.8 times), than the positive point. When with plain barrier the positive point was optimized to 1.6 times, while the negative point was lowered.

The optimum breakdown voltage decreased gradually as the hole diameter increased and at 20mm hole diameter the effect was like the plain barrier.

Conclusion: From the results, optimization is only effective with positive points electrode and it endures even with small opening within the ionization zone. It is necessary to check this in practical situations because the specified optimum voltage of an equipment may be lowered.

Keywords: negative polarity, sharply non-uniform field, gaseous volume, defective barrier, optimum voltage

1. INTRODUCTION

Several works have been done on small and medium needle plane airgap using insulating barriers. Marx investigated the influence of the polarity of the impulse voltage to the breakdown mechanism [1, 2].

He determined that the positive impulse voltage produces a positive thin streamer discharge from the needle to the barrier with a lot of branching. The streamer cannot penetrate the barrier and stops there, accumulating positive charges on the surface of the barrier that faces the needle. Therefore, the gap between the barrier and the plane becomes uniform with the positively charged surface on the barrier, acting as the positive electrode while the negative one is the plane electrode. The potential is almost equal all over the charged

* Tel.: +2348036908502
E-mail address: jhnafa@yahoo.co.uk.

surface of the barrier. That homogenization of the gap prevents the development of the leader, thus increasing the breakdown voltage. Depending on the gap length, the position of the barrier and the breakdown voltage is increased considerably.

Another study was carried out by Roser [1, 3, 4] on small gap (10cm gap). He investigated, among others the influence of the insulating material and of its thickness to the level of breakdown voltage. It was concluded that the critical point is not the thickness of the barrier, given that the thickness and the effectiveness of the provided insulation is negligible as compared to the most important parameters, the gap length, the uniformity of the electric field, the shape of the applied voltage and the position of the barrier inside the gap.

The barrier effect is not attributed to the additional insulation that improves quantitatively the field strength but to the presence of the barrier that affect qualitatively the breakdown mechanism. In uniform fields barrier effect is of minor importance. Roser's model complies with Marx observations that the discharge accumulates charge on the barrier and homogenizes the barrier-plane gap. In his determination he concluded [1, 5, 6] that the breakdown voltage of the non-uniform needle – barrier – plane field is equal to the breakdown voltage of the uniform barrier – plane field. To verify this, he conducted comparative experiments with positive impulse on a needle – plane gap with barrier and on a plane – plane gap (without barrier) with a clearance equal to the distance between barrier and plane of the first gap as shown in fig. 1

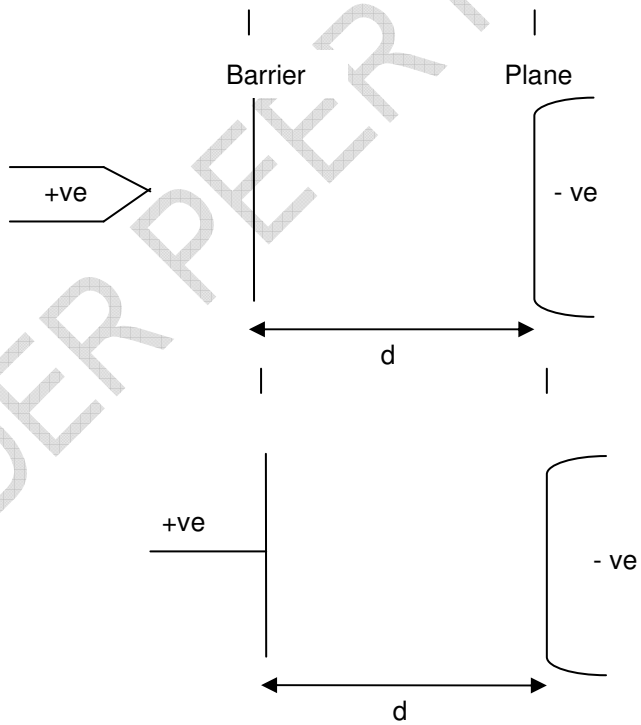

Fig. 1: Non-uniform needle – barrier – plane field and uniform barrier – plane field.

As was expected, the values of the breakdown voltage of the needle – barrier – plane arrangement was found to be very close to the breakdown voltage of plane – plane gap (the uniform field of the latter is equivalent to the barrier – plane field of the first arrangement). The only deviation appeared when the barrier was placed very close to the high voltage

UNDER PEER REVIEW

needle or near the grounded plane. If the barrier is placed near the needle electrode, then the discharge is quite short and the accumulated load on the barrier is not enough to modify and unify the remaining barrier plane gap. Therefore the field of the whole arrangement remains non-uniform. If the barrier is placed near the plate electrode, then the uniform barrier plane gap becomes so small that it may slightly influence the whole gap.

1.1 Negative Impulse Voltage Breakdown

For negative point – barrier – plane gap, the negative streamer approaches the barrier without branching and as a result, a small quantity of negative charge accumulates on small area of the barrier. Therefore the field between the gap and the plane remains non-uniform. That is, the field around the needle is quite strong. The dense field lines which connect the needle with the plane through the barrier permit the inception of discharges between the barrier and the plane.

From fig.2 the behaviour of negative and positive electrode in air and under barrier conditions are shown [7, 8] with gap distance of 1cm to 12cm.

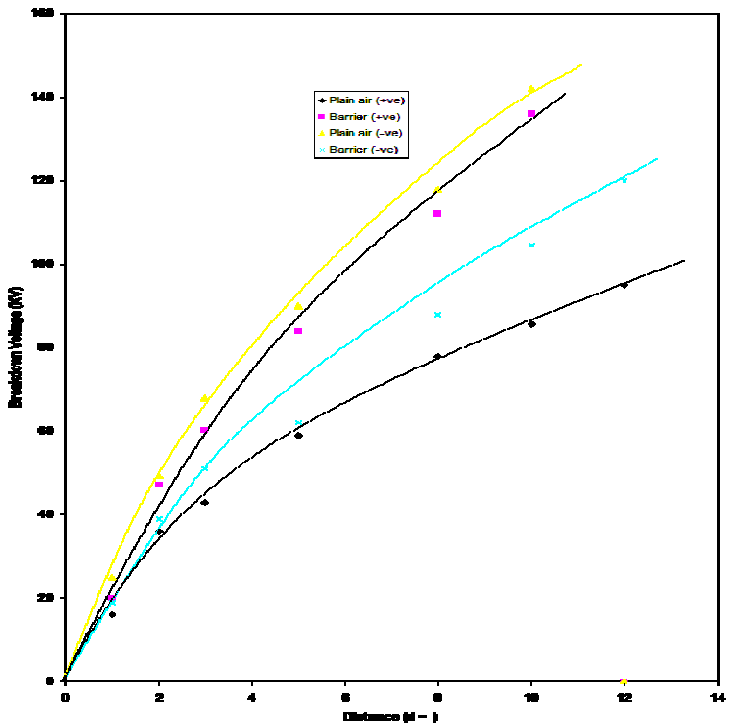

Fig 2: Breakdown Voltage for Positive and Negative Air Gap with Barrier

1.2 Barrier with Opening

Roser performed dc experiments on a small air gap with barrier place at a specific position. Changing the diameter of the opening he observed that the breakdown voltage decreased but still maintained a high votage level. It proved that the barrier contributed to the dielectric strength even with hole. The breakdown voltage decreased at wider opening but was still higher than the one of the gap without barrier. It was obvious that the accumulation of the load on the surface of the barrier homogenized the field to a certain degree depending on the useful area of the barrier (initial surface minus the area of the opening).

Wasilenko and Olesz investigated [1, 2, 9, 10] the effect of a barrier with a circular opening. They used impulse voltage as well as ac voltages. Their experiment confirmed that the barrier retains the improved strength of the gap with the circular opening. The diameter of the opening played an important role. Their experiment was on a gap distance of 30cm and a barrier of 45cm in diameter. It showed that the barrier effect was eliminated for an opening of larger hole diameter of more than 8cm

From several experimental results,[1, 7] it was established that the optimum voltage can be obtained at a barrier position of 0.25 to 0.3 the normal gap length from the point electrode. The shape of the graphs described the voltage breakdown level for various hole diameters and is shown in fig. 3.

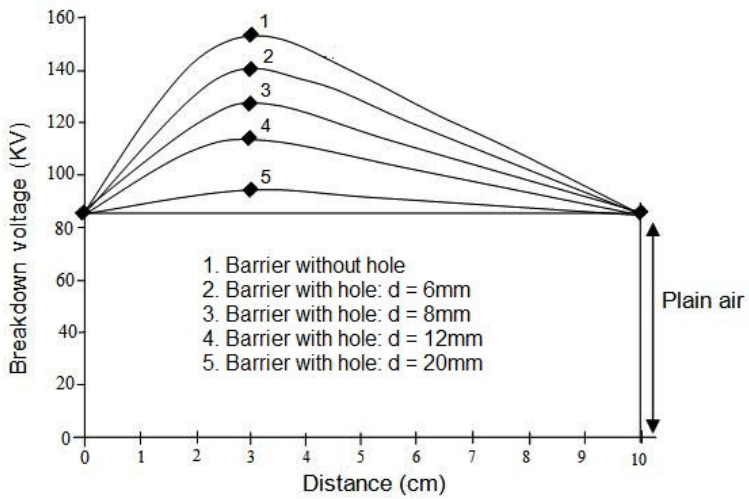

Fig. 3: Voltage optimization for positive needle electrode using barrier of different hole diameters

2.0 Materials and Methods

The breakdown mechanisms and the behaviour of positive and negative point electrodes under barrier were different, therefore it was necessary to experimentally, compare the positive needle electrode and the negative point (needle) electrode under different barrier conditions. The equipment used was the high voltage single phase 100kv high voltage test equipment. It has the A.C, D.C and impulse stages. The maximum impulse voltage was 150kv and generates a standard impulse of 1.2 of 50 µsec. The stages of the equipment is shown in fig. 4

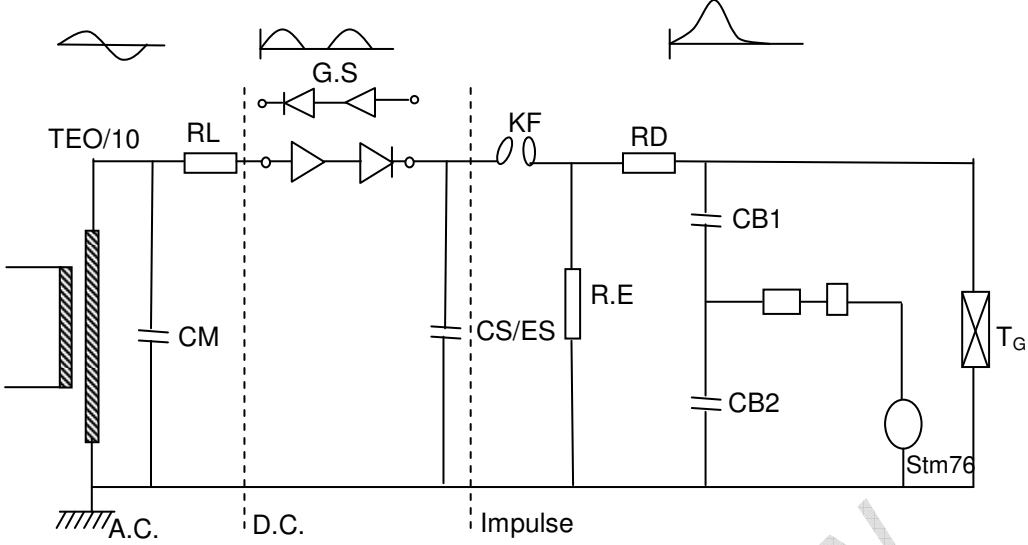

Fig. 4: Stages of Test Equipment

The needle electrode used for the experiment is shown in fig. 5 with the tip diameter of 0.25mm.

Fig. 5: The Needle Electrode

The electrode stand T_G was constructed from dried wood and ebonite pipes as shown in fig. 6

Fig. 6: Electrode Stand T_G with the barrier carrier.

On the wooden crossbar a threaded iron rod of 320mm length was made to carry the needle electrode. The plane (plate) electrode was made from mild steel square sheet with folded edges that was earthed.

2.1 Experimental Procedures

With the help of the electrode stand T_G, the needle electrode was fixed.The gap distance of 10cm and a barrier distance of 2.5cm from the needle electrode was maintained. With that position, ten (10) shots were allowed in each of the experiment, the breakdown probability was taken for both polarities of the point- barrier- plain electrode. An observation was also made by placing a sheet of paper on the plate electrode and the punches on the paper were observed.

UNDER REVIEW

3.0 Results

From table 1, the fifty percent probability ($V_{50\%}$) of the Test results is shown. From the given results, figure 7 was drawn for all positive and negative test with the different hole diameter.

Table 1: Test Results of Positive and Negative Needle Electrodes ($V_{50\%}$)

S/N	Barrier Condition	Breakdown Voltage		Relative Humidity Percentage mmHg	Temperature ^{O}C
		Position Point b/d Voltage kv	Negative Point b/d voltage kv		
1.	Plain Barrier without hole	136	105	75	40.1
2.	Hole 6mm	128	140	78	39.4
3.	Hole dia 8mm	114	143	74	402
4.	Hole dia 12mm	108	148	77	39
5.	Hole diameter 20mm	83	148	78	38.9
6.	Airgap without barrier	82	150	76	37.8

N/B: The voltage under reference atmospheric condition V_O is given by

$$V_O = V \times \frac{h}{d} \quad - - - - - - - - \quad (1)$$

Where V = Voltage under actual test condition
h = Humidity correction factor
d = Air density correction factor

These values were necessary to standardize the breakdown voltage under reference conditions.

UNDER PEER REVIEW

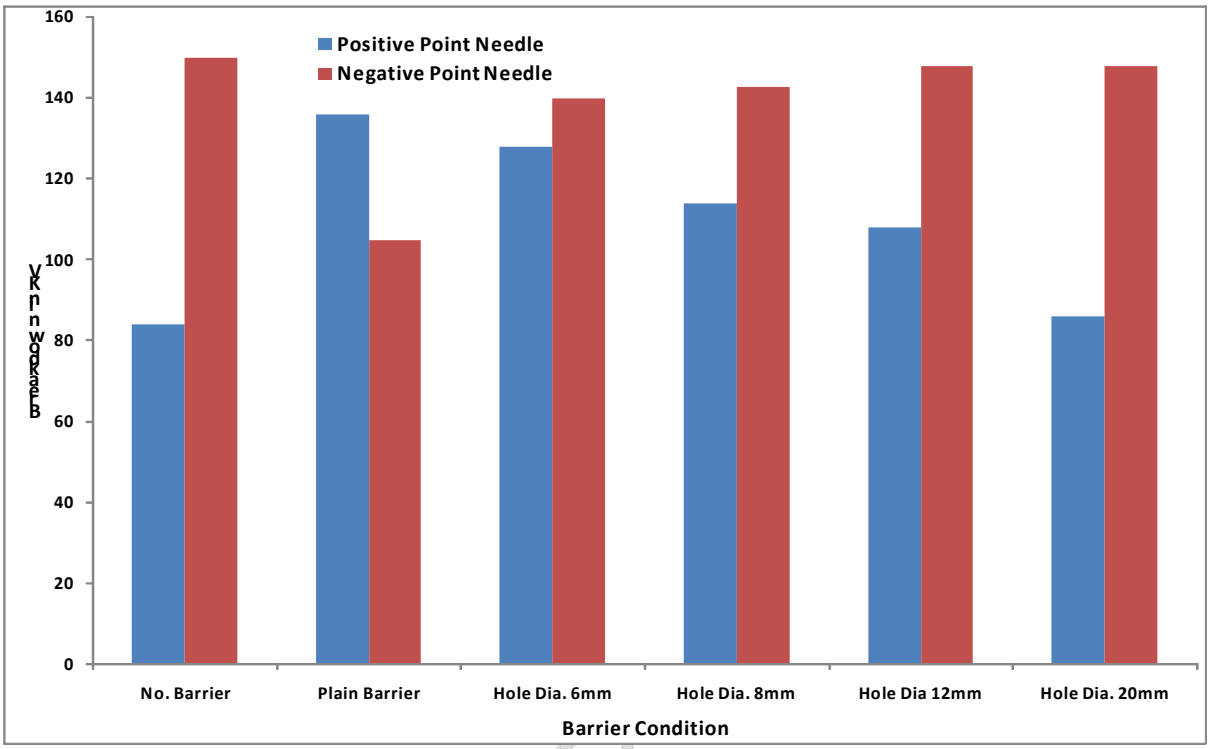

Fig 7: Breakdown Voltage (KV) Between Positive and Negative Needle Electrode at 10cm Airgap

Discussion

The shot distribution pattern shown in fig. 8 is a demonstration of the breakdown mechanism for negative and positive point electrode.

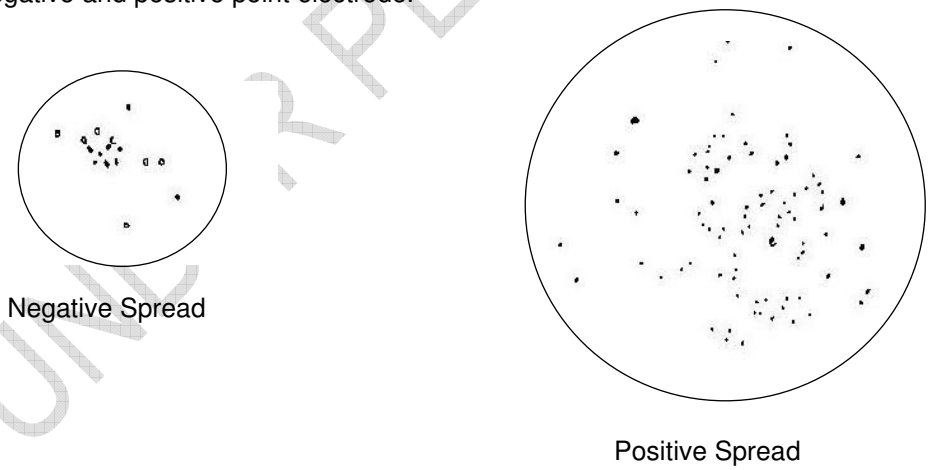

Fig. 8: Spread of shots of Negative and Positive breakdown.

Negative streamers approach the plane electrode without branching and the breakdown occurs in step as opposed to the intense branching of positive streamers. The field at the head of the main avalanche supplements the external field and promotes the growth of

filamentary avalanches, which contributes to the breakdown of the airgap in the positive needle – plane electrode.

From table 1, the breakdown voltage without barrier for negative point is about 1.8 times the positive point in plain airgap. The effect of barrier optimizes the positive (positive point) field by almost 1.6 times while the barrier effect reduces the breakdown voltage of the negative field. Different researchers gave slightly different explanation but it is reasonable to examine that which was proposed by Roser [1, 2, 11] for the positive field.

Roser's model complies with Marx observation that the discharge accumulated charges on the barrier and homogenized the barrier-plane gap. He assumed that the discharge is so intense that the voltage drop across the channel is very low. This means that the potential of the barrier becomes equal to the potential of the needle, that is, the test voltage as it were, was applied directly to the barrier – plane gap. For breakdown to occur the voltage must be high enough to cause the breakdown of the gap.

The negative streamer approaches the barrier without branching, therefore small area of the barrier makes barrier – plane gap non-uniform. This field on the barrier is concentrated at a point and strong. The dense field lines which connect the needle with the plane through the barrier permit the inception of discharges between the barrier and the plane. It could be said that the barrier serves to reduced the space by its position and thereby lower the breakdown voltage.

Defective Barrier: From Roser's experiment it was observed that the breakdown voltage decreased at wider openings but still was higher than the one of the gap without barrier. It was obvious that the accumulation of the load on the surface of barrier homogenized the field to a certain degree depending on the useful area of the barrier. This explanation was complimented by Wasilenko and Olesz (Topalis and Danikas, 2005, Wasilenko and Olesz, 1992), and gave a substantiated explanation that the maximum of the charge density appears around the central point of the barrier. The opening removes a crucial part of it, thus reduces the remaining surface charge and changes its distribution. This seems to suggest that the material of the barrier and its thickness influences the voltage level of the breakdown in its own way, though not very noticeable. If a thin barrier with small diameter of opening is used, the puncture of the barrier may be more favourable than the passage through the opening.

The breakdown voltage was lower with plain barrier for the negative point as shown in table 1, and all centrally opened holes on the barrier seemed to have no effect on the breakdown voltage. This could be attributed to the pattern of breakdown (discharge) for the negative point. Since the breakdown is in step without filamentary avalanches, the breakdown of the main avalanche (leader) will always occur through the opening.

5.0 Conclusion

- Optimization is only possible with the positive point electrode and the position of the barrier is a crucial point in optimizing the airgap. Generally, if the distance of the barrier from the electrode is within one – third of the gap length, the breakdown voltage may be around 2 to 3 times (this value depends on the gap length) higher than the one of the same gap length without barrier.
- The impulse of negative polarity leads to breakdown in steps irrespective of the position of the barrier.

UNDER PEER REVIEW

- Generally, when a hole is opened within the ionization zone especially at the centre of the barrier, no barrier effect will be felt for negative streamers.
- The maximum optimized breakdown voltage is reduced as the holes on barriers are made wider until a point where the barrier effect is not felt. The width of the holes depends on the length of the gap. With very small airgap a small hole on the barrier surface leads to a significant reduction in breakdown voltage. This also depends on the location of the hole. If it is located at the central point of the barrier it eliminates all of the beneficial effect of barrier. For such small gap it is not advice able to use porous barriers.

UNDER PEER REVIEW

References

1. Topalis, T.V. Danikas, M.G. Breakdown in airgaps with solid insulating barrier under voltage stress. Facta Universities, Ser. Electrical Engineering. 2005; 18: 87 – 104.
2. Wasilenko, E. Olesz, M. Effect of solid barrier with circular opening on impulse breakdown voltage of rod-plane air gap. Proc. 10th Int. Conf. Gas discharges and their application, 1992; 2: 636 – 63.
3. Afa J.T. Impulse breakdown of small air gap in electric field, Part I: Influence of barrier position. J. Appl. Sci. & Technol., 2011; 16 (1 & 2): 58 – 62.
4. Ming, L., Leijon, M., Bengtsson, T. Factors influencing barrier effects in Air gaps. 9th Int. Symposium on High voltage Engineering, Graz, Austria, 1995; 2: 2168-1 – 2168-4.
5. Kara, A., Kalendeil, O., Mardikyan, K. Effect of dielectric barriers to the electric field on rod-plane air gap. Proc. Of the Comsol users conference Prague, 2006.
6. Kouno, T. Breakdown of composite dielectrics, the barrier effect, IEEE Trans. EL. 1980; 15 (3): 259 – 261.
7. Afa, J.T. Behaviour of negative and positive point electrodes in air under barrier condition" Global Journal of Engg. & Tech. 2009; 2 (4): 601 – 606.
8. Razevig D.V. [Translated by M.P. Chourasia]. High Voltage Engineering. New Delhi: Khanna Publishers, 2003.
9. Timatkov, V.V. Pietsch, G.J., Saveliev, A.B., Sokolova, M.V.,Temnikov, A.G. Influence of solid dielectric on the impulse discharge behaviour in a needle to plane air gap. Journal of Physics D: Applied physics. 2005; 38 (6): 877 – 886.
10. Boubaker, A. Discharge phenomena in long air gap with insulation barrier" in Proc. 4th Int. Symp. of High Voltage Engineering. 1983; 2: paper 44.05.
11. Abdel-Salam, M., Singer, H. Ahmed, A. Effect of the dielectric barrier on discharges in non-uniform electric fields. J. Phys D. Applied Phys. 2001; 34(8): 1219 – 1234.
12. Naidu,M.S.,Kamaraju, V. High Voltage Engineering. New Delhi: Tata McGrraw-Hill Publishing Company Limited , 2007.

UNDER PEER REVIEW