Method Article

Fabrication of Energy Efficient Improvised Incubator

Vandana Sharma[1], Hemesh Jain Surana[1],Urvasini Singh[1], Pooja[1], Jayashri Vajpai[2*], Sunita Kumbhat[1*]

1Department of Chemistry, Faculty of Science, New Campus, J.N.V. University, Jodhpur-342001, Rajasthan India
2Department of Electrical Engineering, Faculty of Engineering, M.B.M. Engineering College, J.N.V. University, Jodhpur-342001, Rajasthan India

ABSTRACT

Aims: The paper presents the design, working and testing of an energy efficient improvised incubator, a general purpose heating and cooling equipment designed to maintain a constant temperature in the range of 5 °C to 50 °C.
Study Design: Determination of biochemical oxygen demand (BOD), requires maintaining the water sample at 20 °C continuously for 5 days, in an incubator resulting in high cost and extensive use of energy. Energy efficient incubators are hence the need of the industrial world. An improvised incubator is designed by scaling down the conventional incubators and incorporating voltage regulator, overload protection unit and UPS system for continuous operation during power failure.
Conclusion: The testing results indicate that the developed prototype takes only 1/6th of the time and 1/10th of energy as compared to conventional incubators.
Place of study: The design and fabrication of the improvised incubator was conceptualized at Department of Chemistry and Department of Electrical Engineering J.N.V University, Jodhpur and fabrication was done at M/s Surana Scientifics, Jodhpur under the Instrument Development Program of DST, New Delhi.

Keywords: Design of incubator, BOD, energy efficient equipment, improvised incubator, prototype development

1. INTRODUCTION

An incubator is a general purpose heating/cooling device designed to maintain a constant temperature usually in the temperature range of 5°C to 100°C. Incubator is a versatile device used to grow and maintain microbiological culture, cell culture, for hatching of the eggs of birds and reptiles; and even for neonatal care of premature babies. Incubator is essential for determination of biochemical oxygen demand (BOD) by measuring dissolved oxygen (DO) in a 5 day test of waters and waste water samples [1, 2].

In general an incubator has a compressor to reduce the temperature below ambient and a heater to raise it to the ambient temperature. A refrigerating unit and the industrial

*[1]Corressponding authors: Email: skumbhat@rediffmail.com.
*[2] jvajpai@gmail.com

grade PID controller along with a relay system is used to control the operation of the units at the desired level which work against each other and produce a precise control of temperature. The incubators are available in various sizes, the capacity generally ranges from 112L to 546 L (4 cu. ft. to 193 cu. ft.) and their minimum power consumption varies from 500 to 600 Watts.

Research work has been reported on improving the practical aspects of design of incubator for poultry and harnessing solar energy for commercial applications [3-5].Hierro et al. [6] have monitored a commercial incubator to quantify the gradients of temperature and relative humidity during incubation process.Siwiec et al. [7] have reviewed the method of modelling used for describing changes in BOD in wastewater.However, not much work has been reported on improvisation of BOD incubator except a notable study of Grey [7] on the effects of temperature variability of incubator on BOD.Determination of BOD requires maintaining the water sample at (20 ±1) °C continuously for 5 days [1,2]. The incubators available are generally too big to be used in research laboratory. During DO and BOD measurement, it was felt that the commercially available incubators are huge in size and they consume enormous amount of energy. Even for one set of experiment the device needs continuous power supply for at least 5 days, resulting in overall high cost of BOD determination. The aim of present study is to fabricate an energy efficient improvised incubator which can be used in space constrained laboratories in the academic institutions.Study compares the overall performance of developed incubator with that of commercially available incubator in terms of overall dy006Eamic response and energy efficiency.

2. MATERIALS AND METHODS

The improvised incubator was developed and fabricated in collaboration with M/S Surana Scientifics, Jodhpur. The conventional BOD incubator model no. PSI, Pooja Scientific Instruments, New Delhi was used for comparing the performance of incubator developed during present study in terms of size, volume and capacity.

Table 1 Design Specification of proposed incubator vis-a-vis conventional incubator

Features	Proposed Incubator	Conventional Incubator
1. Size	30.5 x 30.5 x 30.5 mm (12”x12”x12”)	60.96 x 45.72 x 45.72 mm (24”x18”x18”)
2. Volume	1 cu. ft.	4 cu. ft.
3. Capacity	27 L	117 L
4. Temperature Range	5 °C to 50 °C	5 °C to 60 °C

2.1 Incubator Design

A double walled conventional heating and cooling unit with outer body of enamel painted mild steel (resistant to corrosion) and inner chamber is made up of AISI 304 grade stainless steel with adjustable perforated shelves supported on inner walls. The gap between the walls is filled with thermal glass wool which insures maximum thermal efficiency. The complete unit is provided with double doors. A glass inner door facilitates the viewing of samples without disturbing the temperature inside. The outer door is made of stainless steel for safety and is provided with lock and key for security as shown in figure 1.The block diagram of the incubator is shown in figure 2.

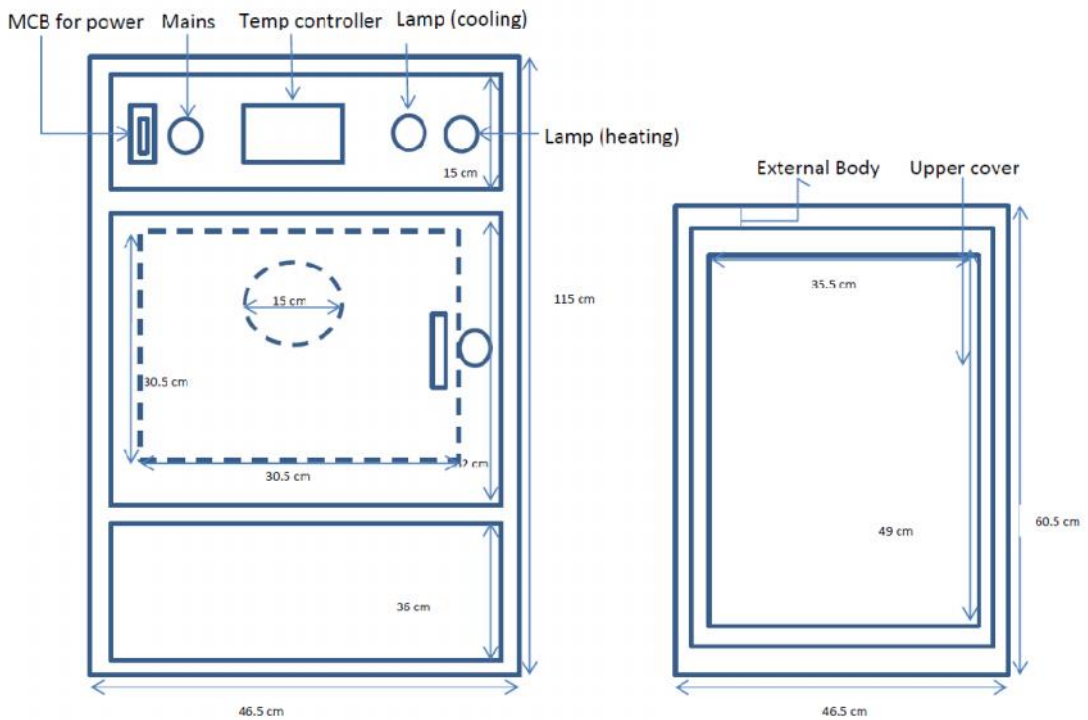

Fig. 1 Diagram of improvised incubator

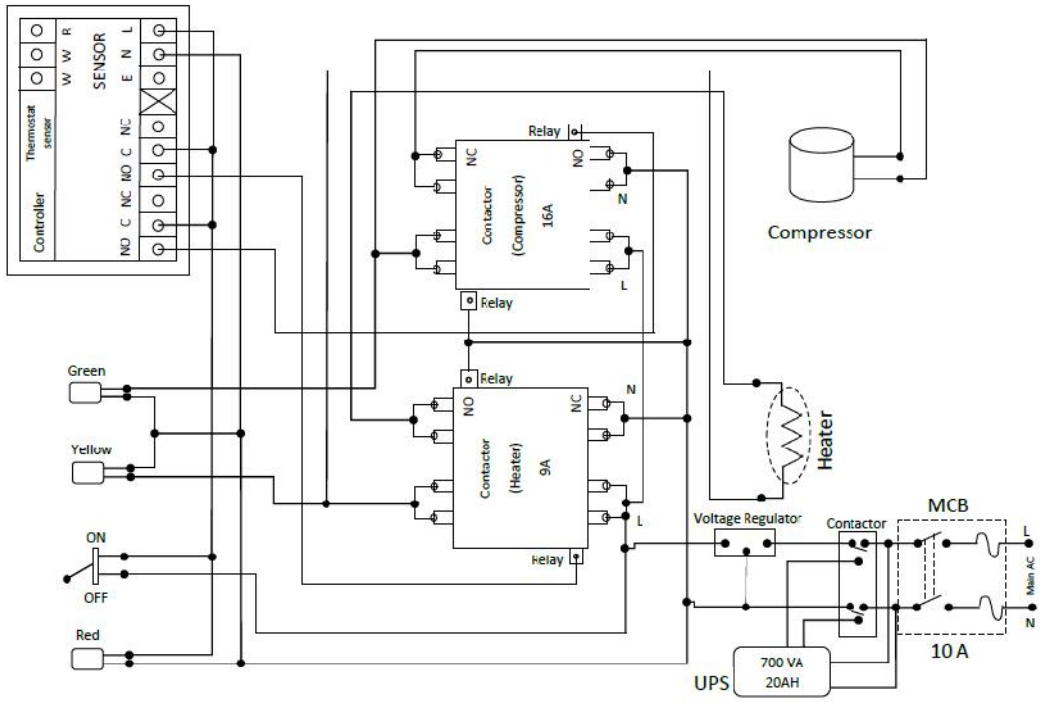

Fig.2 Schematic diagram of designed improvised incubator

2.2 Incubator Working

The electrical circuit of the incubator as shown in figure 2 includes a power conditioning unit comprising of the following subsections.

a. Voltage regulator: For maintaining a constant supply of 230 V despite input supplyvariations.
b. Overload protection unit: For protecting the entire system against drawing excessive current due to fault.
c. Earth leakage protection unit: For ensuring the safety of operating personnel who may have wet hands during handling.
d. UPS system: For ensuring the continuous operation of the incubator in case of supply disruptions due to load shedding or development of faults for upto 5 hours.
e. Thermostat unit: For sensing the ambient temperature and operating the relays for switching on the heater/ compressor.
f. Sensor: For temperature measurement.
g. Controller Unit: PID controller for precise automatic control of temperature.
h. Contactors: For connecting/isolating the supply to the heater/compressor.

The electrical circuit operates both the heater and the refrigeration compressor to maintain the temperature within an accuracy range of ±0.5 ^{o}C. A fan is provided in incubator for forced air circulation and the temperature is controlled by employing an industrial grade Proportional-Integral-Derivative (PID) controller. A PID controller reads the sensor, compute the desired actuator output by solution of proportional, integral and derivative following the standard equation of PID controller [9] as given by equation (1).

$$u(t) = K_p e(t) - K_i \int_0^t e(\tau)d\tau + K \frac{d}{dt} e(t) \quad \ldots\ldots\ldots\ldots\ldots (1)$$

where,
$u(t)$: output of controller
K_p: Proportional gain, a tuning parameter
K_i: Integral gain, a tuning parameter
K_d: Derivative gain, a tuning parameter
e: Error = set point value- present value
t: Time or instantaneous time (the present)
τ: Variable of integration; takes on values from time 0 to the present t.

The use of PID controller permits achievement of temperature accuracy even upto ± 0.1 ^{o}C, by proper tuning of K_p, K_i, K_d.

2.3 Testing Procedure:

The testing of the device for performance evaluation with respect to power, energy consumption and time required to reach the desired temperature was carriedby incorporating Wattmeter and using a Wattmeter (upf, 300V, 5A) with 375 full scale divisions, an ammeter (0-5 A) a voltmeter (0-300 V). The testing circuit has been developed to calculate the power of incubator; the circuit diagram as shown in figure 3.

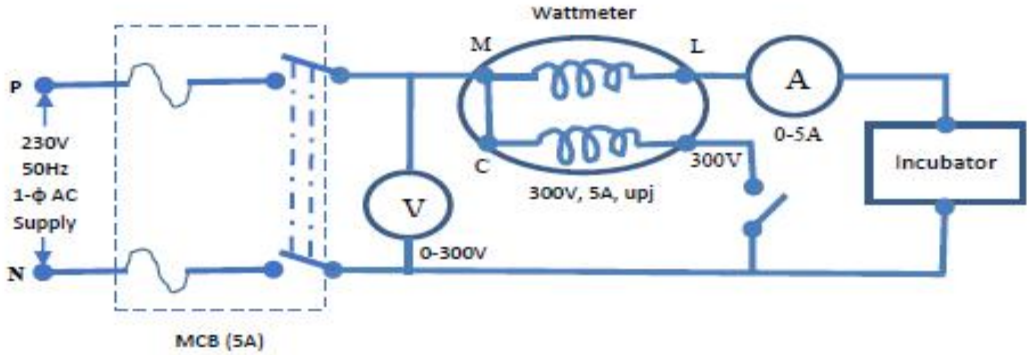

Fig. 3 Circuit diagram for testing

The power is calculated by multiplying the scale reading of wattmeter bya constant multiplying factor which was calculated by using equation (2).

Multiplying factor $= \frac{V \; X \; I \; X \; COS \; \theta}{full \; scale \; division}$ ..... (2)

$$= \frac{V \; X \; I \; X \; COS \; \theta}{375} = \frac{300 \; X \; 5 \; X \; 1}{375} = 4$$

where V is input voltage, in Volt i.e. 300 V, I is input current, in A i.e. 5 and cos Θ is power factor i.e.; 1, where Θ is the design value of angle between voltage and current. The wattmeter scale reading was noted for every one degree rise and fall in temperature of incubator with corresponding data (time required, power and energy consumed).The experiment was conducted when ambient temperature was 22 °C, in the first experiment the incubator was cooled from 22 °C to 5 °C to examine its performance. Then, the incubator was left to attain the normal temperature. At the initiation of second experiment the ambient temperature has risen to 24°C.The incubator was heated from 24 °C to 50°C. A stop watch with a least count of 0.1 s was used for recording the time. The temperature was measured by using the industry standard PT 100 temperature sensor, along with digital display, with a least count of 0.1 °C. The energy is calculated by multiplying power by time. The time is time taken by incubator for every degree rise and fall in temperature while heating and cooling as shown in table 2 and table 3 respectively.

Table 2 Comparative performance of conventional and improvised incubator while heating

Temp (°C)	Conventional Incubator						Improvised Incubator					
	Scale Reading	Time (s)	Cumulative time (s)	Power (W)	Energy (Ws)	Cumulative Energy (Ws)	Scale Reading	Time (s)	Cumulative time (s)	Power (W)	Energy (Ws)	Cumulative Energy (Ws)

	I	II	III	IV=I *4	V= IV*II	VI	VII	VIII	IX	X=VII*4	XI=X *VIII	XII
Initial	110	0	0	0	0	0	0	0	0	0	0	0
24.0	70	148	148	280	41440	41440	45	39	39	180	7020	7020
25.0.	70	107	255	280	29960	71400	45	29	68	180	5220	12240
26.0	70	98	353	280	27440	98840	45	27	95	180	4860	17100
27.0	70	99	452	280	27720	126560	45	28	123	180	5040	22140
28.0	70	92	544	280	25760	152320	45	29	152	180	5220	27360
29.0	70	97	641	280	27160	179480	45	25	177	180	4500	31860
30.0	70	82	723	280	22960	202440	45	30	207	180	5400	37260
31.0	70	87	810	280	24360	226800	45	29	236	180	5220	42480
32.0	70	90	900	280	25200	252000	45	25	261	180	4500	46980
33.0	70	93	993	280	26040	278040	45	30	291	180	5400	52380
34.0	70	92	1085	280	25760	303800	45	28	319	180	5040	57420
35.0	70	93	1178	280	26040	329840	45	30	349	180	5400	62820
36.0	70	93	1271	280	26040	355880	45	29	378	180	5220	68040
37.0	70	98	1369	280	27440	383320	45	29	407	180	5220	73260
38.0	70	97	1466	280	27160	410480	45	26	433	180	4680	77940
39.0	70	99	1565	280	27720	438200	45	25	458	180	4500	82440
40.0	70	99	1664	280	27720	465920	45	26	484	180	4680	87120
Averagepower				**280**	**Energy (Wh)**	**129.42**	**Averagepower**			**180**	**Energy (Wh)**	**24.2**
Energy (kWh)						**0.129**	**Energy (kWh)**					**0.024**

Table 3 Comparative performance of conventional and improvised incubator while cooling

Temp (°C)	Conventional Incubator						Improvised Incubator					
	Scale Reading	Time (s)	Cumulative time (s)	Power (W)	Energy (Ws)	Cumulative Energy (Ws)	Scale Reading	Time (s)	Cumulative time (s)	Power (W)	Energy (Ws)	Cumulative Energy (Ws)
	I	II	III	IV= I *4	V= IV*II	VI	VII	VIII	IX	X=VII *4	XI=X* VIII	XII
Initial	0	0	0	0	0	0	0	0	0	0	0	
22.0	70	393	393	280	110040	110040	75	26	26	300	7800	7800
21.0	70	116	509	280	32480	142520	75	13	39	300	3900	11700
20.0	60	103	612	240	24720	167240	75	13	52	300	3900	15600
19.0	60	106	718	240	25440	192680	75	15	67	300	4500	20100

18.0	60	114	832	240	27360	220040	75	17	84	300	5100	25200
17.0	60	121	953	240	29040	249080	70	11	95	280	3080	28280
16.0	60	128	1081	240	30720	279800	70	14	109	280	3920	32200
15.0	60	142	1223	240	34080	313880	70	14	123	280	3920	36120
14.0	60	148	1371	240	35520	349400	70	14	137	280	3920	40040
13.0	60	145	1516	240	34800	384200	70	13	150	280	3640	43680
12.0	60	173	1689	240	41520	425720	70	14	164	280	3920	47600
11.0	60	186	1875	240	44640	470360	70	13	177	280	3640	51240
10.0	60	211	2086	240	50640	521000	70	15	192	280	4200	55440
9.0	60	224	2310	240	53760	574760	70	16	208	280	4480	59920
8.0	65	237	2547	260	61620	636380	70	14	222	280	3920	63840
7.0	65	278	2825	260	72280	708660	70	17	239	280	4760	68600
6.0	65	087	2912	260	22620	731280	70	18	257	280	5040	73640
5.0	70	216	3128	280	60480	791760	25	36	293	100	3600	77240
Avg Power				**250**	**Energy (Wh)**	**219.93**	**Avg Power**			**261**	**Energy (Wh)**	**21.46**
Energy (kWh)						**0.22**	**Energy (kWh)**					**0.021**

The comparative performance of conventional incubator with that of improvised incubator with respect to time and energy while heating and cooling are shown in figure 4(a, b) and figure 5(a, b) respectively.

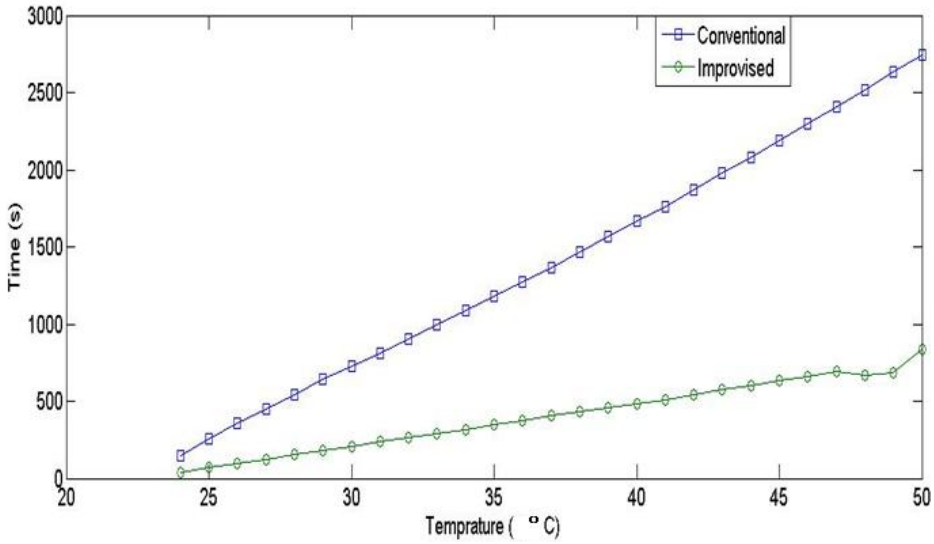

Figure 4-a: Performance of improvised incubator with respect to time required while heating in comparison to conventional incubator

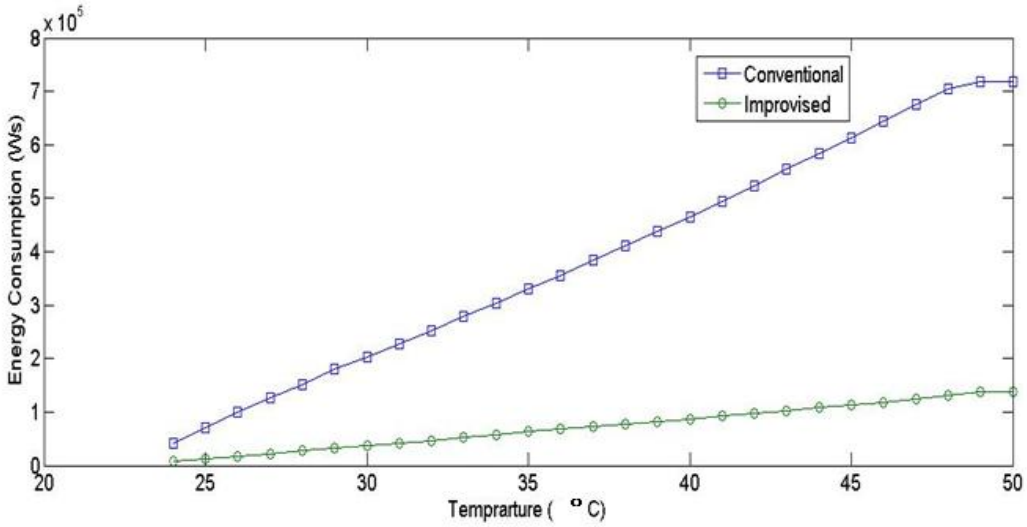

Figure 4-b Performance of improvised incubator with respect to energy required while heating in comparison to conventional incubator

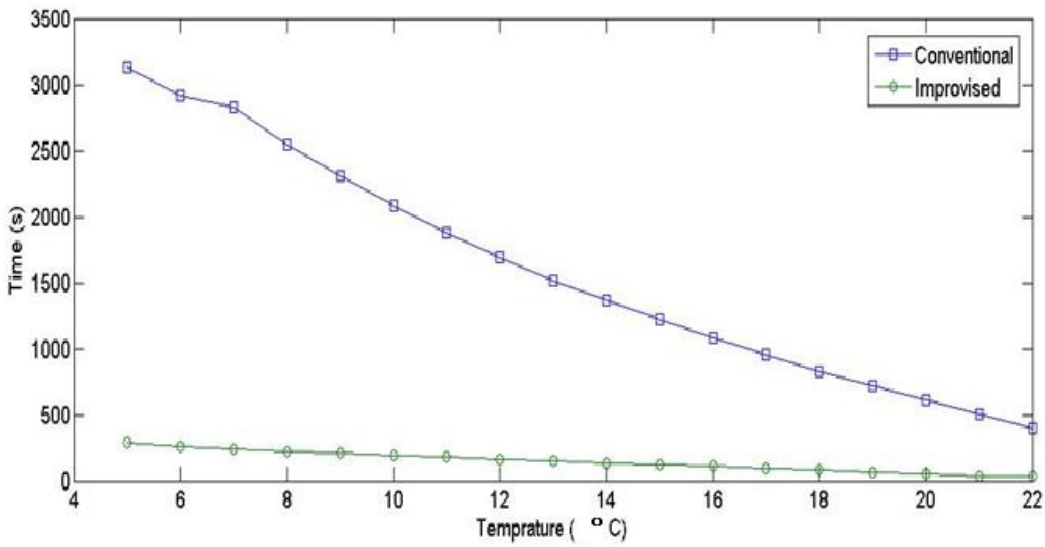

Figure 5-a Performance of improvised incubator with respect to time required while cooling in comparison to conventional incubator

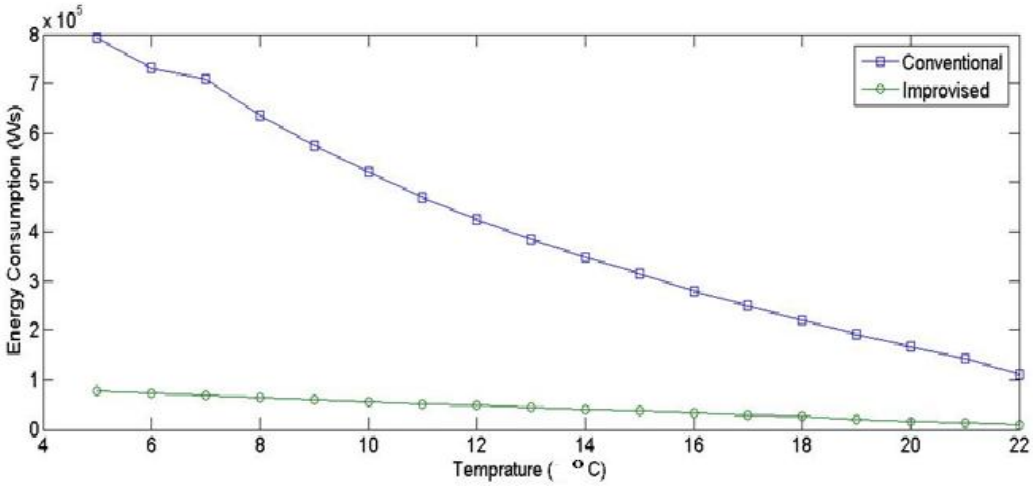

Figure 5-b Performance of improvised incubator with respect to energy required while cooling in comparison to conventional incubator

3. RESULTS AND DISCUSSION

Table 4 summarizes the comparative results of the conventional incubator with the improvised incubators. It can be seen from table 4 that with the reduction in dimensions in the improvised incubator there has been considerable reduction in the total time required for both heating (25°C to 40°C) and cooling (22°C to 5°C) has reduced to 1/6th of that of original. Energy consumption in both heating and cooling has reduced to 1/10th. This is considerable amount of conservation of energy, as total energy consumption for 5 days by conventional incubator and improvised incubator is 47.02 kWh and 31.48 kWh respectively it would further enhanced, considering the test duration of 5 days for BOD period.

Table 4.Comparison of performance of conventional incubator with improvised incubator

Feature	Conventional Incubator	Improvised Incubator
1. Performance in cooling from 22 °C to 5 °C		
a. Time required	3128 s	293 s
b. Energy required	0.220 kWh	0.021 kWh
2.Performance in heating from 25 °C to 40 °C		
a. Time required	1664 s	484 s
b. Energy required	0.129kWh	0.024kWh

4. CONCLUSION

The designed incubator is significantly better in performance in terms of energy consumption and speed of response for attaining the desired temperature level. Further the design also ensures not only the safety of equipment and the power supply system but also avoidance of hazards to operating personnel. The inclusion of a UPS unit has enabled ensuring continuity of power supply over the full five day duration of BOD test, thus enhancing the reliability of test results. An effort is being made by the researchers for incorporating solar PV panel and inverter is to improve energy efficiency. It is expected that

the improved incubator developed in this research will be useful for academic institutions and small laboratories that focus on biochemical analysis.

ACKNOWLEDGEMENT

We are thankful to M/s Surana Scientifics, Jodhpur for fabrication of improvised incubator as per our design. Financial assistance (ID/SEN/128/08) from Instrument Development Program, Department of Science and Technology, New Delhi, Govt. of India is highly acknowledged.

COMPETING INTERESTS

Authors have declared that no competing interests exist.

AUTHORS' CONTRIBUTIONS

US, Pooja,JV,SKhave worked towards the development and fabrication of improvised incubator. VS, HJS and JV have designed the protocol for testing the different parameters of the incubator and plotted the graphs. VS wrote the first draft of the manuscript. SK and JV hasfinalized the manuscript. All authors read and approved the final manuscript.

CONSENT (WHERE EVER APPLICABLE)

Authors may use the following wordings for this section: "All authors declare that 'written informed consent was obtained from the patient (or other approved parties) for publication of this case report and accompanying images. A copy of the written consent is available for review by the Editorial office/Chief Editor/Editorial Board members of this journal."

REFERENCES

1.Rice EW, Baird RB, Eaton AD, Clesceri LS.Standard methods for the examination of water and wastewater. 22nd ed. APHA, AWWA, WEF: 2012

2. Metcalf, Eddy. Wastewater Engineering Treatment and Reuse. 4thed, Tata McGraw Hill: 2002

3. Meijerhof R, WPSA Working Group 6 (Reproduction). Practical aspects of commercial incubation in poultry workshop, Practical aspects of commercial incubation in poultry.2002: 41-46

4. Kuye SI, Adekunle NO, Adetunji OR, Olaleye DO. Design and construction of a solar incubator. Proceedings of the third conference on science and national development 2008

5. Kisaalita WS, Bibens B, Lane E, Young P, Kinsey VR, Some S. Design and testing of an avian hatchery solar energy incubator for smallholder poultry farmers from the Sudano-Sahelian Belt. AMA, Agricultural Mechanization in Asia, Africa and Latin America 2010;41(2):84-90

6. Hierro JG, Robla JI, Barreiro P, Hernando ECC, Diezma B. Design of a solar incubator.part 1: Monitoring temperature and enthalpy gradients under commercial production. Internatinal Conference of Agricultural Engineering CIGR AgENG 2012

7. Siwiec T, Kieprynska L, Abramowicz K, Rewika A, Nowak P. BOD measuring and modelling methods – review, Ann. Warsaw Univ. of life Sci., Land Reclam. 2011; 43(2)

8. Gray NF. BOD incubator and temperature variability.Environmental Technology Letters. 1989; 10(3):259-268

9. Nagrath IJ, Gopal M, Control Systems Engineering, 5thed. New age International Publishers:2012