Original Research Article

A general review on Photovoltaic, modeling, simulation and economic study to build 100MW power plant in Lebanon

Claude Ziad Bayeh[1*] and Nazih Moubayed[2*]

[1]EEE Group-R&D Department, Rabieh, Lebanon.

[2]Lebanese University Faculty of Engineering, Tripoli, Lebanon.

ABSTRACT

The goal of this paper is to study the possibility to build a 100MW Photovoltaic Plant in small countries like Lebanon, it gives a general review about the basis of photovoltaics. Different electronic models of photovoltaic cells are presented. This paper presents also the functioning of a photovoltaic cell, its model using MATLAB/Simulink, and discuss some algorithms used to extract the maximum power from a PV panel. Simulated results are presented. Economic study to build a 100 MW photovoltaic farm in Lebanon is discussed, with a comparative table between its tariff and existing tariffs such as from Power Authority, Private Generators, and Regional Distributors. Some other solutions are proposed to build PV panels and plant above unused surfaces such as above lakes and rivers are also proposed for the Lebanese case.

Aims: The aim of this study is to help the reader to acquire sufficient information about Photovoltaic System and its function, MATLAB/Simulink Model, used Algorithms, and the most important thing is to compare its economic study for the Lebanese case to see if it is possible to build 100MW in Lebanon or not. The same study can be used for other countries, but of course the values might change.

Study design: This study used the software MATLAB/Simulink to model the Photovoltaic module, The economic study is based on other studies but it is developed for the Lebanese case.

Place and Duration of Study: This study was made by the authors during the year 2014 in Lebanon.

Methodology: The economic study is studied based on other studies in the world, but for this time, it is made for the Lebanese case, and the Farm used produces 100MW which is not done before in Lebanon. The tariffs of the existing sources are compared with the tariff of the proposed study, and based on it, one can choose if it is profitable to build such project in Lebanon or not.

Author's contribution: The authors' contribution is that this is the first study made for Lebanon to build 100MW Photovoltaic Farm, and it compares different tariffs in Lebanon such as from PV Farm, Power Authority (EDL), Private Generators, and Regional Distributors. And it shows clearly that the PV Farm is possible to be built in Lebanon only for certain conditions. Some other solutions to integrate PV system when there is lack of large

surfaces are proposed, one of the solutions is to construct PV systems on the surface of lakes and rivers which will produce a large amount of energy, and this method is sufficient to supply approximately the half needed energy in Lebanon.

Results: The main interesting results in this paper are that the construction of PV Farm in Lebanon is possible if it is encouraged by the Government, its tariff is less than other sources of energy such as the Private Generator and Regional Distributor, but it can't be competitive with the power authority for several reasons, the authors also propose to use the surfaces of rivers and lakes in order to build PV Farms, for instance if one uses the lake Qaraoun in Bekaa, it is possible to produce between 600MW and 1200MW which is approximately equal to 26.5% to 53% of the total produced power in Lebanon. Thus the production of such power can resolve big problems in Lebanon such as the cut off of the electricity every day for about 12 hours.

Conclusion: The photovoltaic system is preferred with respect to other sources of energy. The future of photovoltaics is promising, the efficiency increase each year and it is expected to over pass 50% in the next decades, the price of photovoltaic system is decreasing which will give it advantages with respect to other renewable energy systems.
In conclusion, this paper presents a general review on photovoltaic system. The models and mathematical expressions of photovoltaic cells are presented. The MATLAB model of the standard expression of photovoltaic module is designed. The results are discussed, many characteristics such as I-V curves and P-V curves are simulated using different parameters. An economic study of building 100MW photovoltaic farm is presented and discussed. Some advantages and disadvantages of the PV system are discussed. Finally, the usage of unused surfaces such as above lakes and rivers may be very efficient for small countries like Lebanon, and the produced power using these surfaces is approximately the half produced power in Lebanon, therefore this paper may be very helpful to resolve the problem of electricity in Lebanon and any other country which has the same characteristics and problems as for Lebanon.

Keywords: Photovoltaic, MATLAB Model, PV Farm, Power plant, economic study, Lebanon.

1. INTRODUCTION

The photovoltaic is considered as a generator of electricity from solar radiation using semiconductors, it converts the solar energy into electrical energy using the photovoltaic effect. The photovoltaic panel is composed of many modules and each module contains many photovoltaic cells arranged in series and parallel in a way to give a certain voltage and a certain current at the output [1-6]. Many papers present the mathematical equations, the MATLAB/Simulink model and simulation of the photovoltaic system [7-17]. Other papers present the simulation using LABVIEW [18-19].

This paper shows a brief review about photovoltaic. In the second Section, a general description and form of Photovoltaic cells, their functions and equivalent circuits are presented. Mathematical Modeling of Photovoltaic Panel is discussed in section 3. In the fourth Section, some Maximum Power Point Algorithms are presented, and only two are developed. They serve to extract the maximum power from a PV panels. In the fifth Section, a MATLAB model of photovoltaic panel is presented. The section 6 treats and discusses the results obtain from section 3. The Section 7 studies the economic study to build a 100MW photovoltaic farm in Lebanon. The Section 8 presents some possible implementation of PV

in small countries like Lebanon. Section 9 presents conclusions. And finally section 10 presents Nomenclature.

2. DESCRIPTION AND FORM OF PHOTOVOLTAIC CELLS

The photovoltaic cell is formed by a thin layer of p-n junction of semiconductor. The solar radiation with a frequency greater than the threshold frequency able to pull out the peripheral electrons will hit the peripheral electrons in the p-n junction and the electrons will go from the p-doped silicon to the n-doped silicon then go through a negative electrode to the load and return back to the p-n junction through the positive electrode and so on [1-6] (figure 1). The characteristics of the PV cell and module are not linear; they depend on many factors such as the temperature of the cells and the irradiance intensity.

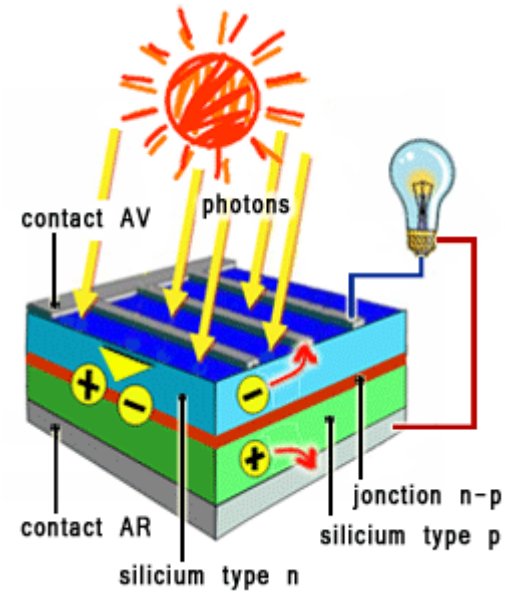

Fig. 1: Conversion of the solar energy into kinetic energy of the electrons [20].

Photovoltaic cell is the smallest element that composes a photovoltaic panel (figure 2), a PV module is formed by many PV cells arranged in series and parallel in order to give a certain voltage and a certain current at its output (figures 3.1 and 3.2), and a PV panel is formed by many PV modules.

Fig. 2: represents a single photovoltaic cell [1].

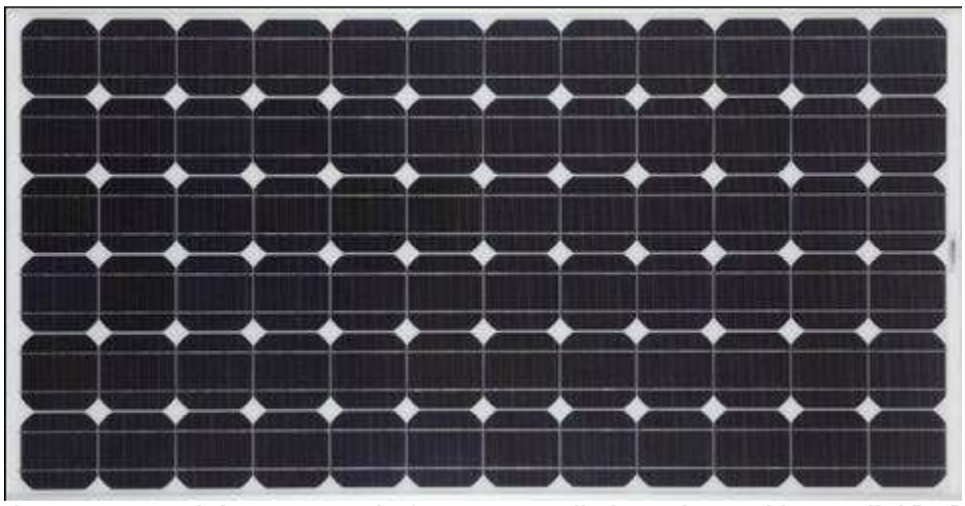

Fig. 3.1: PV module composed of many PV cells in series and in parallel [21].

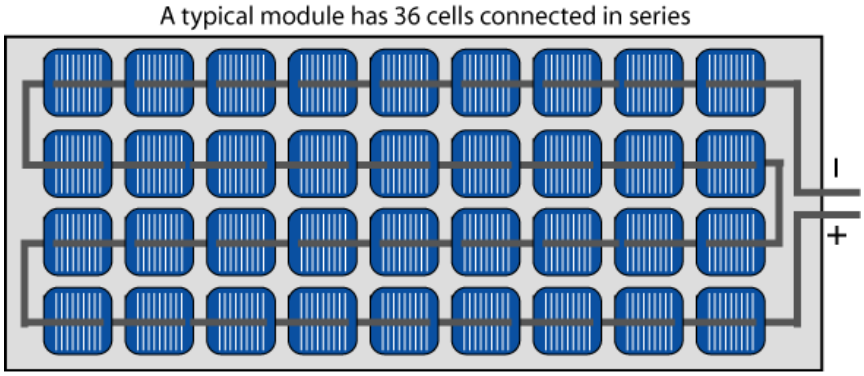

Fig. 3.2: PV module composed of many PV cells in series [22].

In figure 3.2, a module with 36 PV cells connected in series in order to give an output voltage equal to 21.6V at standard conditions (25^0C, and AM=1.5 (Air Mass)).

In figure 4, a Photovoltaic Farm is composed of many parallel and series module arranged in a way to give high voltage and current according to the need.

Fig. 4: Photovoltaic Farm [28].

2.1 Different type of photovoltaic cells

The photovoltaic cell can be made using different materials and elements such as Copper Indium Selenium ($CuInSe_2$), Cadimium Telluride (CdTe), Silicon (Si), Galium Arsenic (GaAs) and others. The efficiency and band gap of each material is presented in figure 5.

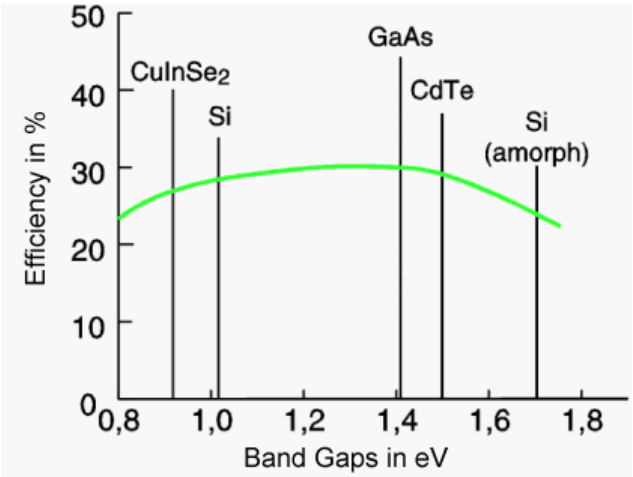

Fig. 5: common known materials for solar cells [23].

The energy payback time of the [23]:

-Monocrystalline (Si) cell: ~ 4 years.
-Polycrystalline (Si) cell: 1.6 to 2.7 years.
-Amorphous (Si) cell: 0.9 to 1.6 years.

In table 1, a comparison between commercial photovoltaic cells is presented.

Table 1: Comparison between commercial photovoltaic cells [23].

	Crystalline Silicon	Amorphous Silicon	CIGS	CdTe	Organic
Conversion Efficiency	13-18%	5-10%	10-12%	10.5%	5%
Current cost per Watt*	$2.5-3.5	$2-2.5	$0.6 (predict)	$1.3 <$1 (predict)	
Material Shortage	No	Silane	Indium	Te(?)	No
Toxic Substance	NA	NA	Cadmium Selenium	Cadmium Tellurium	NA
Reliability	Excellent	Fair	Good	Good	Poor
Company in the field	Suntech, SunPower	AMAT, Dupont	Nanosolar, Solyndra	First Solar	Konarka

2.2 Equivalent electronic circuit of Photovoltaic cell

The photovoltaic module and cell have been modeled with different electronic circuits, the main electronic circuit models are presented as following:

2.2.1 Ideal Model

A single diode is parallel to the source current [9]. It is depicted as in the figure 8.

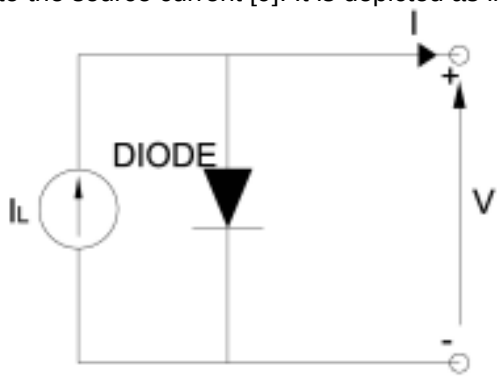

Fig. 8: Ideal model of the Photovoltaic cell.

The accuracy of this model is low, but it is simple and fast to use. In presence of developed software such as MATLAB and LABVIEW this model is not used.

The equation of the current functions of the voltage is [9]:

$$I_{cell} = I_{L,cell} - I_{O,cell}\left(e^{\left(\frac{V_{cell}}{V_T}\right)} - 1\right) \quad (1)$$

For nomenclatures refer to section 10.

2.2.2 Simple model

The simple model uses a parallel diode and a series resistance [8]. It is presented in figure 9.

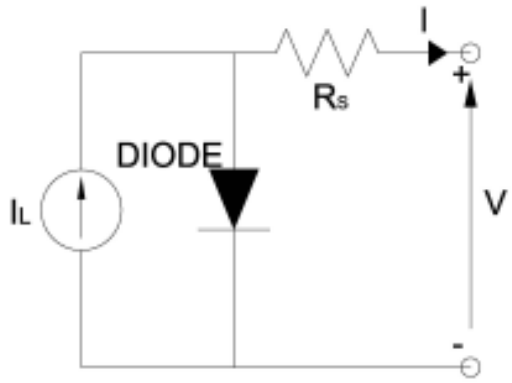

Fig. 9: Simple model of the Photovoltaic cell.

The accuracy of this model is good; this model can be used to present the form of a PV cell. But to obtain a better accuracy, one has to choose more advanced models.

The equation of the current functions of the voltage is [8]:

$$I_{cell} = I_{L,cell} - I_{O,cell}\left(e^{\left(\frac{V_{cell}+I_{cell}R_{S,cell}}{V_T}\right)} - 1\right) \quad (2)$$

For nomenclatures refer to section 10.

2.2.3 Standard model

In this model, the electronic circuit uses one parallel diode, one parallel resistance and one series resistance [8] (figure 10).

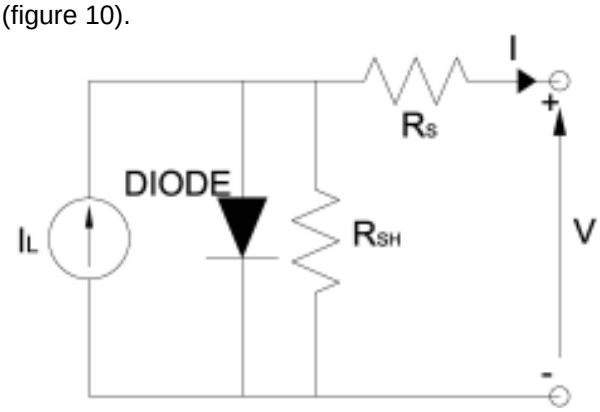

Fig. 10: Standard model of the Photovoltaic cell.

This model is the most used model to describe the function of a photovoltaic cell and module [7-8], this model is used in this paper. The accuracy of this model is good.

The equation of the current functions of the voltage is [8]:

$$I_{cell} = I_{L,cell} - I_{O,cell}\left(e^{\left(\frac{V_{cell}+I_{cell}R_{S,cell}}{V_T}\right)} - 1\right) - \frac{V_{cell}+I_{cell}R_{S,cell}}{R_{SH,cell}} \quad (3)$$

For nomenclatures refer to section 10.

2.2.4 Standard model with two diodes

The standard model with two diodes has a very good accuracy (figure 11), but it is somewhat complicated [12], it can be used with powerful software such as MATLAB and LABVIEW [12].

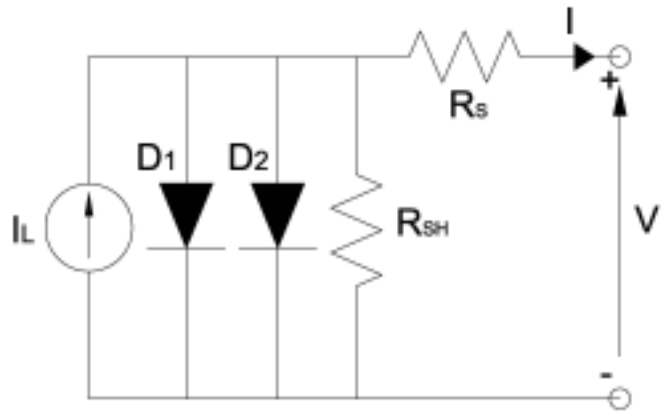

Fig. 11: Standard model with two diodes of Photovoltaic cell.

The equation of the current functions of the voltage is [12]:

$$I_{cell} = I_{L,cell} - I_{O1,cell}\left(e^{\left(\frac{V_{cell}+I_{cell}R_{S,cell}}{V_{T1}}\right)} - 1\right) - I_{O2,cell}\left(e^{\left(\frac{V_{cell}+I_{cell}R_{S,cell}}{V_{T2}}\right)} - 1\right) - \frac{V_{cell}+I_{cell}R_{S,cell}}{R_{SH,cell}} \quad (4)$$

For nomenclatures refer to section 10.

2.2.5 Generalized Photovoltaic Model

Paper [40] presents a generalized form of Photovoltaic Model using software such as MATLAB/Simulink, this model is suitable for any PV cell, module or array, which is used to analyze and design the MPPT.

3 MATHEMATICAL MODELING OF PHOTOVOLTAIC PANEL

In this section, the mathematical model of photovoltaic cell and module is presented, the modelling of the PV cell and PV module used the standard form (1 prallel diode, 1 parallel resistance and 1 series resistance).

Mathematical model of a PV cell [7-8] is:

$$I_{cell} = I_{L,cell} - I_{O,cell}\left(e^{\left(q\frac{V_{cell}+I_{cell}R_{S,cell}}{n_{cell}kT}\right)} - 1\right) - \frac{V_{cell}+I_{cell}R_{S,cell}}{R_{SH,cell}} \quad (5)$$

For nomenclatures refer to section 10.

Consider a PV module with N_P parallel strings (columns) and N_S PV cells per string, then the equation of the PV module will be as following [7-8], [12]:

$$I_{module} = N_P I_{cell} = N_P I_{L,cell} - N_P I_{O,cell}\left(e^{\left(q\frac{N_S V_{cell}+N_P I_{cell}\left(\frac{N_S}{N_P}\right)R_{S,cell}}{N_S n_{cell} kT}\right)} - 1\right) - \frac{N_S V_{cell}+N_P I_{cell}\left(\frac{N_S}{N_P}\right)R_{S,cell}}{\left(\frac{N_S}{N_P}\right)R_{SH,cell}} \quad (6)$$

For nomenclatures refer to section 10.

And

$$I_{module} = I_L - I_O\left(e^{\left(\frac{V+I_{module}R_S}{nV_T}\right)} - 1\right) - \frac{V+I_{module}R_S}{R_{SH}} \quad (7)$$

For nomenclatures refer to section 10.

The equivalent circuit of the PV module is depicted in figure 12.

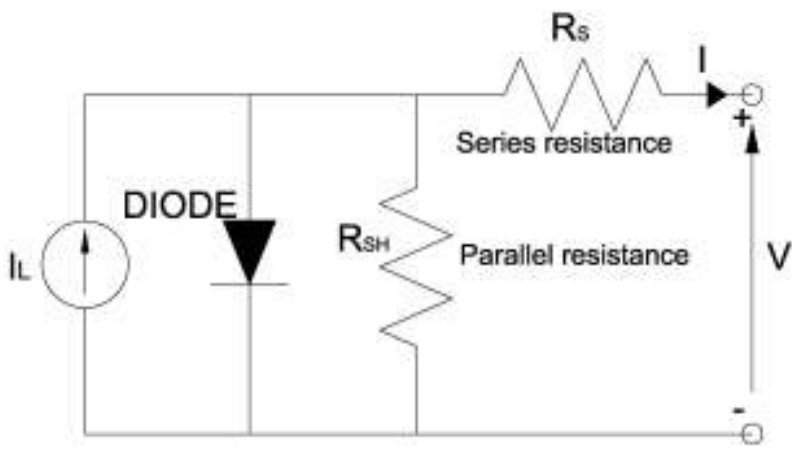

Fig. 12: Equivalent circuit of the PV Module.

When $R_{S,cell} \ll R_{SH,cell}$, therefore the equation (7) can be written as following [7, 8, 10, 11]:

$$I_{module} \approx I_L - I_O\left(e^{\left(\frac{V+I_{module}R_S}{nV_T}\right)} - 1\right) \quad (8)$$

• The output voltage can be deternined from the equation (7), the short circuit curent and the open circuit voltage are [7, 8, 10, 11]:

$$V \approx -IR_S + nV_T \ln\left(\left(\frac{I_L - I_{module}}{I_O}\right) + 1\right) \quad (9)$$

$$I_{SC} \approx I_L - I_O\left(e^{\frac{IR_S}{nV_T}} - 1\right) \quad (10)$$

$$V_{OC} \approx nV_T \ln\left(\frac{I_L}{I_O} + 1\right) \quad (11)$$

• Dependence of parametric model on irradiance [7, 8, 10, 11]:
The variation of the irradiance will affect mainly three parameters I_L, V_{OC}, and I_{SC}.

$$I_L^{GkW/m^2} = \frac{G}{1000} I_L^{1kW/m^2} \quad (12)$$

• Dependence of parametric model on temperature [7, 8, 10, 11]:

The variation of the temperature affects the voltage and the current at the output, V_{OC} and I_{SC}.

$$I_{SC}^{(25+dT)^0C} = I_{SC}^{25^0C}\left(1+\frac{C_{TI}}{100}dT\right) \tag{13}$$

$$I_{L}^{(25+dT)^0C} \approx I_{L}^{25^0C}\left(1+\frac{C_{TI}}{100}dT\right) \tag{14}$$

$$V_{OC}^{(25+dT)^0C} \approx V_{OC}^{25^0C} - \frac{C_{TV}}{1000}dT \tag{15}$$

$$V_{T}^{(25+dT)^0C} = \frac{k(273.15+(25+dT))}{q} \tag{16}$$

For nomenclatures refer to section 10.

$$I_0(T) = I_0(T_r)\left(\frac{T}{T_r}\right)^{\frac{XTI}{n_{cell}}} e^{\left(-\frac{1}{n_{cell}k}\left(\frac{E_g(T)}{T}-\frac{E_g(T_r)}{T_r}\right)\right)} \tag{17}$$

Where

$$E_g(T) = N_S E_g(0) - \frac{N_S C_{EG1} T^2}{C_{EG2}+T} \tag{18}$$

For nomenclatures refer to section 10.

To determine the value of parameters such as R_{SH}, n, R_{SO}, I_O, R_S, and I_L, one has to measure some other parameters which are V_{OC}, I_{SC}, V_{mp}, I_{mp}, V_{min}, V_{max}, I_{min}, I_{max} [7, 8, 10, 11].

By finding the value of these parameters one can find the values of the following parameters [7]:

$$R_{SH} \approx R_{SHO} = \frac{V_{min}}{I_{SC}-I_{max}} \tag{19}$$

$$R_{SO} = \frac{V_{OC}-V_{max}}{I_{min}} \tag{20}$$

$$n \approx \frac{1}{V_T}\frac{(V_{mp}+I_{mp}R_{SO}-V_{OC})}{\left(\ln\left(\frac{(I_{SC}-I_{mp})R_{SH}-V_{mp}}{I_{SC}R_{SH}-V_{OC}}\right)+\frac{I_{mp}}{\left(I_{SC}-\frac{V_{OC}}{R_{SH}}\right)}\right)} \tag{21}$$

$$I_0 \approx \frac{I_{SC}-\frac{V_{OC}}{R_{SH}}}{e^{\frac{V_{OC}}{nV_T}}} \tag{22}$$

$$R_S \approx R_{SO} - \frac{nV_T}{I_0 e^{\frac{V_{OC}}{nV_T}}} \tag{23}$$

$$I_L = I_{SC}\left(1+\frac{R_S}{R_{SH}}\right) + I_0\left(e^{\frac{I_{SC}R_S}{nV_T}} - 1\right) \tag{24}$$

4. MAXIMUM POWER POINT TRACKING (MPPT)

Maximum Power Point Trackers are used in Photovoltaic systems in order to maximize their output power for different ambient conditions, and they maintain the operation of PVs at their maximum power point [34]

There are many algorithms which are developed to improve the performance of the Photovoltaic output power and to extract the maximum power, such as:

1- Incremental Conductance Method (ICM) [32], [39],
2- Parasitic Capacitance [37],

3- Perturb and Observe (P&O) [7], [24],
4- Hill Climbing algorithm [33],
5- Estimate-Perturb-Perturb (EPP) Method [31],
6- Voltage control maximum point tracker [38],
7- Current control maximum power point tracker [38],
8- MP&O method [31],
9- Etc.

This paper gives a brief description of only two methods, because it is impossible to explain all algorithms within few lines, and because it is not the ojective of this paper. Only Two methods are presented and discussed, their advantages and disadvantages are also presented in the following subsections.

4.1 The Perturb and Observe Algorithm (P&O)

There are many different algorithms used to detect the maximum power point of PV panels or modules, one of the most used methods is the Perturb and Observe (P&O) also called Hill climbing method [7], [24]. This algorithm is described in figure 13.

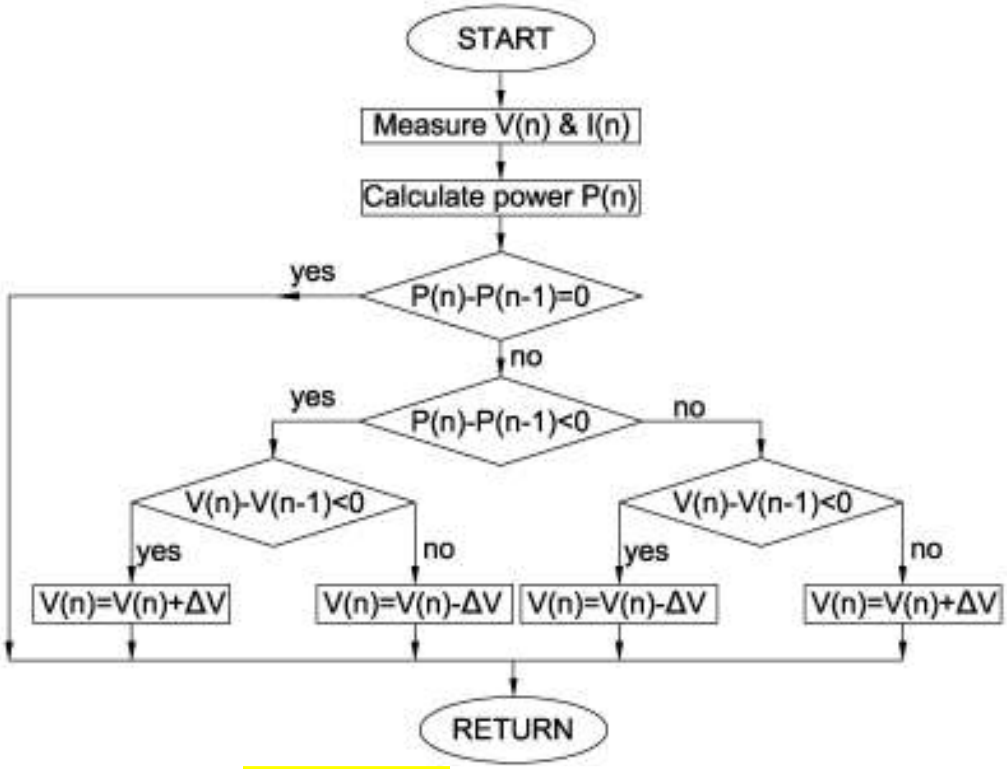

Fig. 13: Flowchart of the Perturb and Observe Algorithm.

4.1.1 The Perturb and Observe Algorithm and P-V curve

The P&O algorithm is used to extract the maximum power from a photovoltaic panel or module; it compares the power and voltage of the last two values and varies the voltage in a way to obtain the highest output power. Figure 14 shows how the Perturb and Observe Algorithm works, if the current power is A, then the algorithm tries to move the point to the right side to attain the maximum power at B, if the current power is C, then the algorithm tries to move the point to the left to attain the maximum power at B and so on (figure 14).

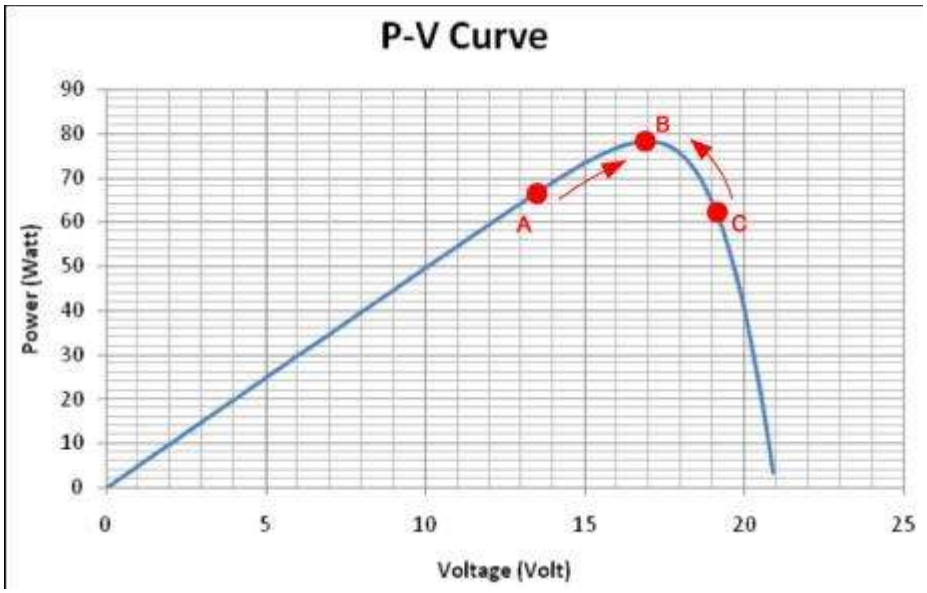

Fig. 14: Perturb and Observe algorithm and its oscillation around the maximum power point.

4.1.2 Advantages and disadvantages of the P&O Algorithm

The P&O Algorithm has many advantages and disadvantages, some of them are stated as following:

4.1.2.1 Advantages:
- It is a simple algorithm.
- It is the most used algorithm for commercial PV panels [30].

4.1.2.2 Disadvantages:
- Oscillation around the point of functioning.
- It finds only the local maximum point and not the global maximum point.
- If ΔV is very small, the algorithm will take a longer time to find the maximum point.
- If ΔV is very large, the algorithm will never find the maximum point.
- Time response is higher than the "ICM" Algorithm, in [30] it shows that the time response for the P&O algorithm is $1.8\mu s$, while it is $0.5\mu s$ for the "ICM" Algorithm.
-Average output Power is less that the "ICM" Algorithm, [30] shows a good comparison.
-Ripples take high values.

4.2 MPPT Algorithm using Incremental Conductance Method

The Incremental Conductance Method is another way used to extract the maximum power from a photovoltaic panel or module [32]; it compares the variations of the voltage and the current of the last two values (Figure 15), and varies the voltage in a way to obtain the highest output power. Figure 16 shows how the Incremental Conductance Method Algorithm works, if the current power is A, then the algorithm tries to move the point to the right side to attain the maximum power at B, if the current power is C, then the algorithm tries to move the point to the left to attain the maximum power at B and so on (Figure 16). This method can be calculated using the following equations:

$$\frac{dP}{dV} = \frac{d(VI)}{dV} = \frac{d(V)}{dV} I + \frac{d(I)}{dV} V = I + \frac{d(I)}{dV} V \quad (25)$$

Where,
P is the Power extracted from the PV Panel (Watt),
dP presents the variation of the Power on the terminal of the PV Panel calculated by the Algorithm,
V designs the voltage on the terminal of the PV Panel (Volt),
dV is the variation of the Voltage on the terminal of the PV Panel calculated by the Algorithm,
I presents the current circulating on the terminal of the PV Panel (Ampere),
dI designs the variation of the current on the terminal of the PV Panel calculated by the Algorithm,

• To obtain the Maximum Power Point, $\frac{dP}{dV}$ should be equal to zero, thus,

$$\frac{dP}{dV} = I + \frac{d(I)}{dV} V = 0 \quad (26)$$

$$\Rightarrow \frac{d(I)}{dV} = -\frac{I}{V} \quad (27)$$

• If $\frac{dP}{dV} > 0$, it means that the Power and the Voltage are increasing together, and they are running from the left side to the right side (Figure 15), thus, the point A will approach to the point B, and

$$\frac{d(I)}{dV} > -\frac{I}{V} \quad (28)$$

• If $\frac{dP}{dV} < 0$, it means that the Power is decreasing while the Voltage is increasing, and vice versa. To obtain the Maximum Power Point, the Voltage must run from the right side to the left side (Figure 15), thus, the point C will approach to the point B , and

$$\frac{d(I)}{dV} < -\frac{I}{V} \quad (29)$$

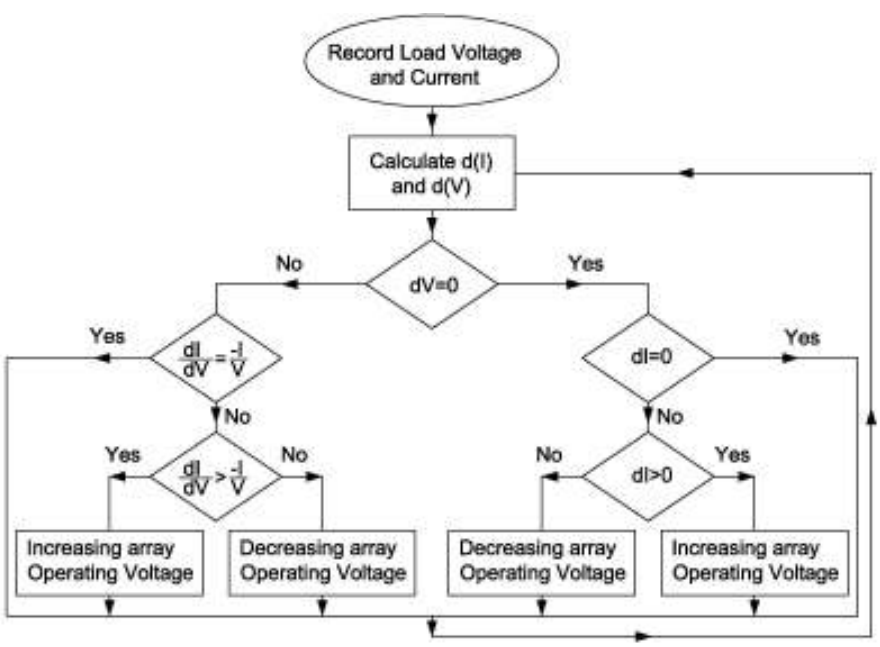

Fig. 15: Flowchart of the Incremental Conductance Method

4.2.1 Incremental Conductance Method Algorithm and P-V curve

Figure 16 presents an explained P-V curve which indicates how the Incremental conductance Method works.

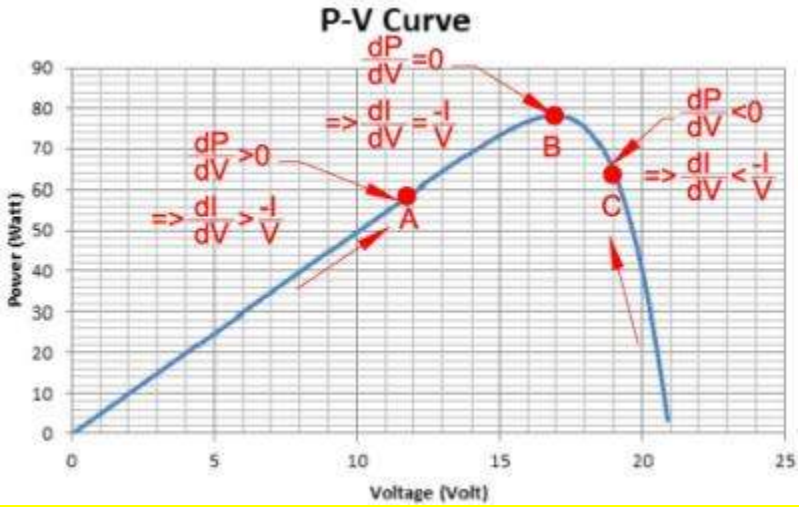

Fig. 16: Incremental Conductance Method is used to obtain the Maximum Power Point.

4.2.2 Advantages and disadvantages of the Incremental Conductance Method Algorithm

The Incremental Conductance Method Algorithm has many advantages and disadvantages, some of them are stated as following:

4.2.2.1 Advantages:

- Its time response is relatively low compared to the P&O Algorithm.
- Its Average Output Power is better than the P&O Algorithm, reference [30] shows a good comparison.
- Ripples are lower than the P&O Algorithm.
- It is able to determine if the Maximum Power Point is reached or not.
- It is more stable than the P&O Algorithm.
- It doesn't oscillate around the Maximum Power Point as P&O does.
- It is an accurate algorithm.
- It rapidly controls the variations of the external phenomena as radiation and temperature changes.
- It tracks rapidly the variation of solar irradiance with higher accuracy compared to the P&O Algorithm [35-36].

4.2.2.2 Disadvantages:

- It is a complex algorithm [35-36].
- Its realization is also complex.
- Its cost of realization is high.
- It finds only the local maximum point and not the global maximum point.

5 MATLAB MODEL OF THE PHOTOVOLTAIC PANEL

The model of a photovoltaic panel and module can be simulated using Matlab/Simulink. In figure 15, a PV module is simulated according to the equations (6) and (7). In figure 16 and 17, the I-V (Current-Voltage), and P-V (Power-Voltage) characteristics are presented, the power is obtained by multiplying the output current I_{module} by the voltage V.

In this paper, the PV module has the following information [7]:
Model: MSX77
Manuacturer: Solarex
$P_{Max} = 77W$; $V_{MP} = 16.9V$
$I_{MP} = 4.56A$; $I_{SC} = 5A$
$V_{OC} = 21V$
$CTI = 0.065 \pm 0.015\ \%/^0C$
$CTV = -(0.5 \pm 0.05)mV/^0C$
Standard Test Conditions: G=1kW/m^2, AM=1.5, $T^0 = 25^0C$.

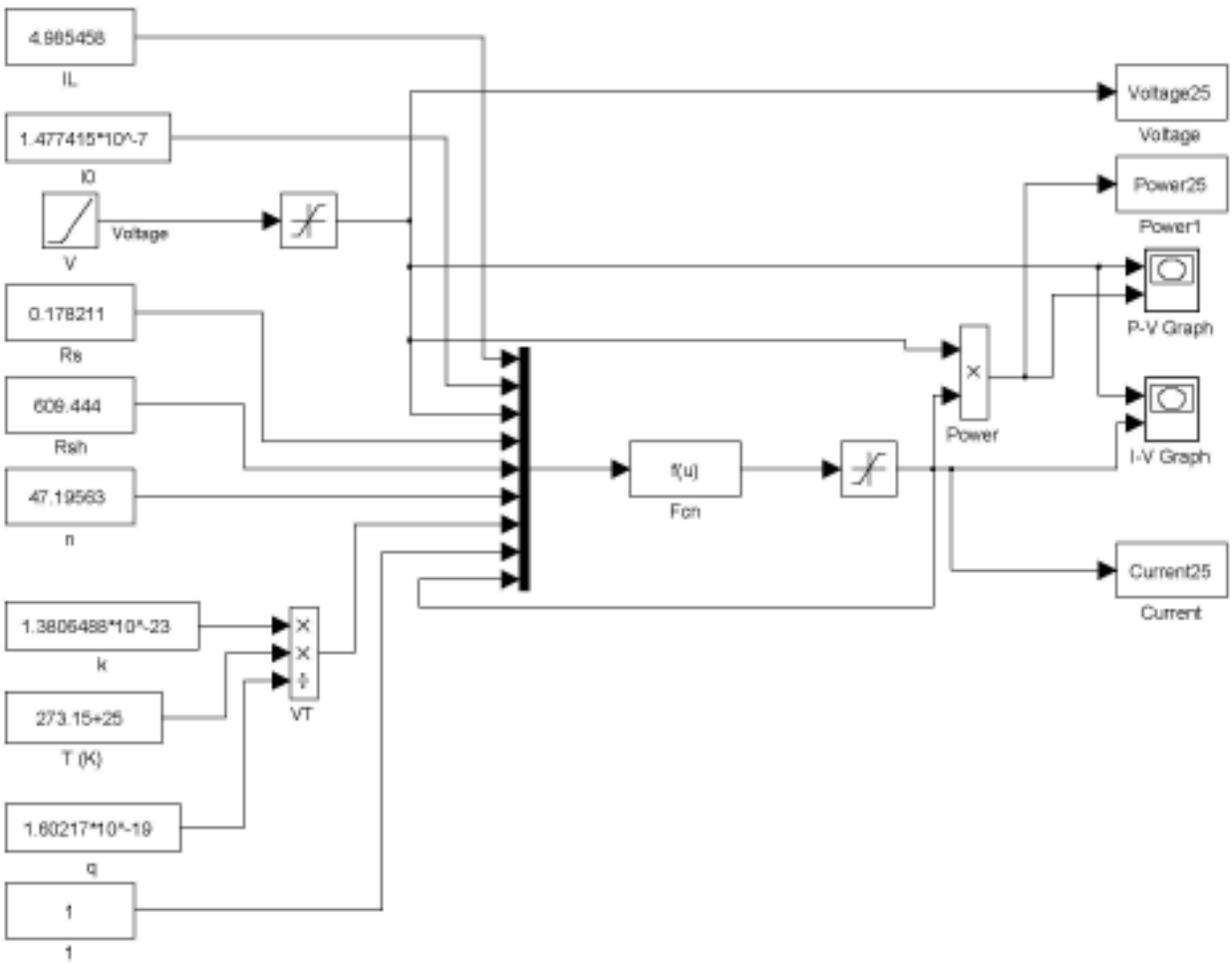

Fig. 15: Modeling of the Photovoltaic panel using Matlab/Simulink, presenting I-V and P-V characteristics.

The values presented for this model can be obtained using the equations presented in the previous Section [7-9], [12-17].

6 RESULTS AND DISCUSSIONS

Using the MATLAB/Simulink model in the previous section, the obtained characteristics of the PV module are illustrated in figures 16 and 17.

6.1 The characteristic of the I-V curve

From the equations (6) and (7), the characteristic of the I-V curve of the photovoltaic module can be drawn taking into consideration the variation of the voltage from 0 up to 21 Volt (figure 16), therefore, the curve of the current functions of the voltage goes from 5 Amperes (current of the short circuit I_{SC}) to zero Ampere (current for Open circuit V_{OC}).

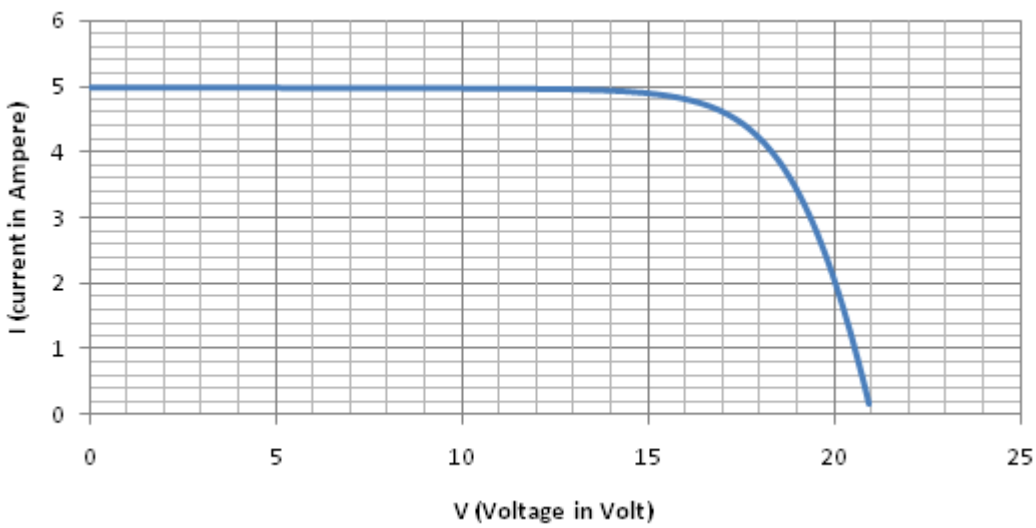

Fig. 16: I-V characteristic of the PV module, for $I_{SC} = 5A$ and $V_{OC} = 21V$.

6.2 The characteristic of the P-V curve

From equations (6) and (7), the characteristic of the P-V curve can be drawn (figure 17) by finding the power functions of the voltage taking into consideration the variation of the voltage from 0 up to 21 Volts, therefore the curve of the power functions of the voltage goes from 0 Watts (power of the short circuit I_{SC}) to the maximum power $P_{MPP} = V_{MPP} I_{MPP}$, and finally return to zero Watt (power for Open circuit V_{OC}).

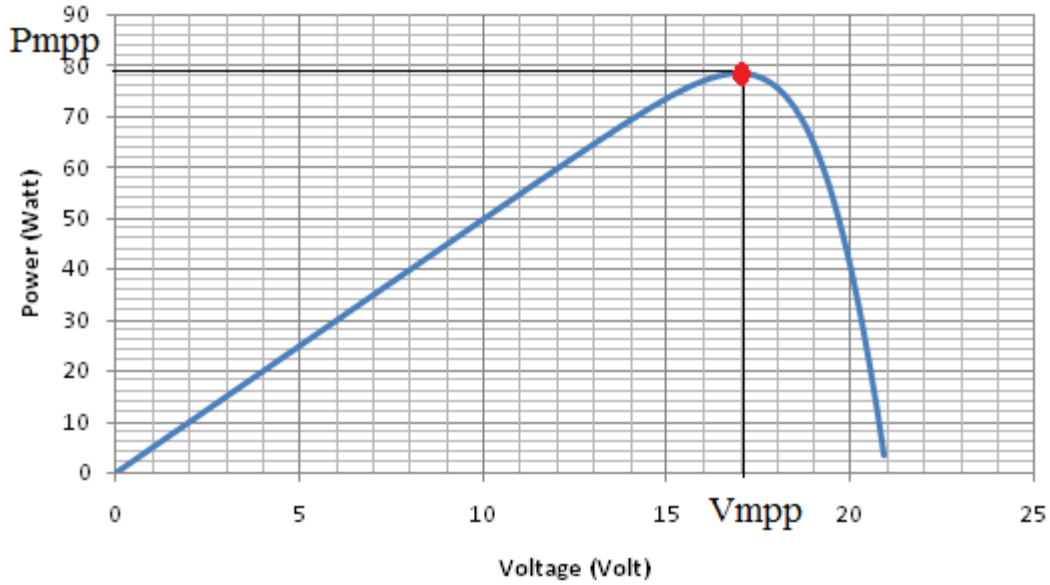

Fig. 17: P-V characteristic of the PV module.

6.3 Characteristics of the I-V and P-V curves by varying the ambient temperature

From the equations (6) to (18), the characteristics of the I-V and P-V curves of the photovoltaic module are drawn in figure 18 and 19 by varying the ambient temperature between 0^0C and 60^0C.

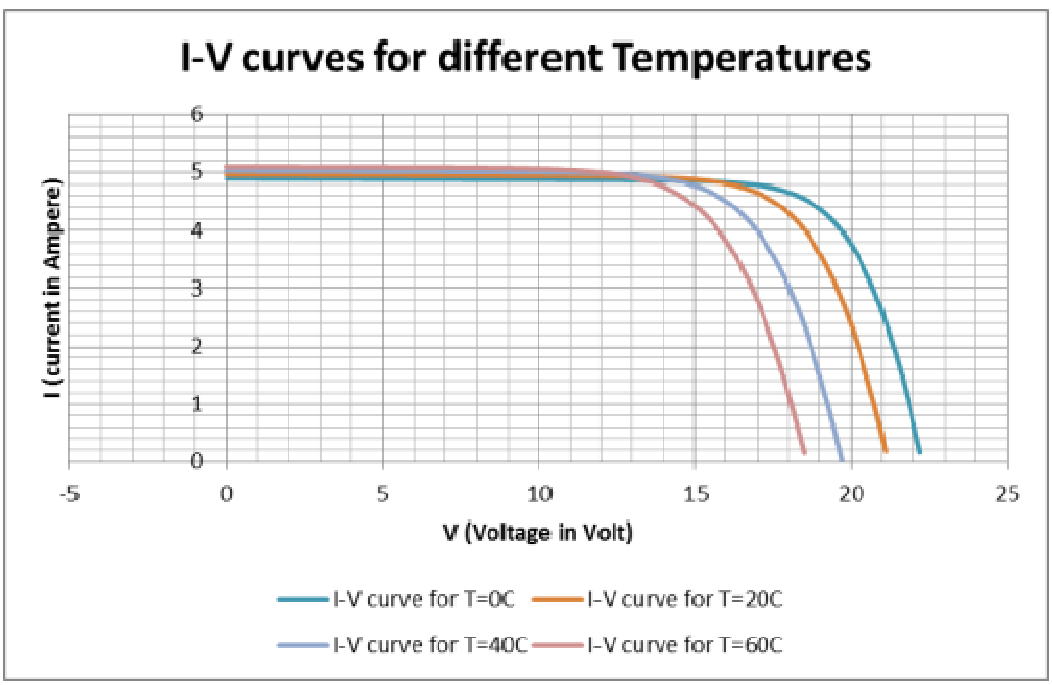

Fig. 18: I-V curves for different temperatures.

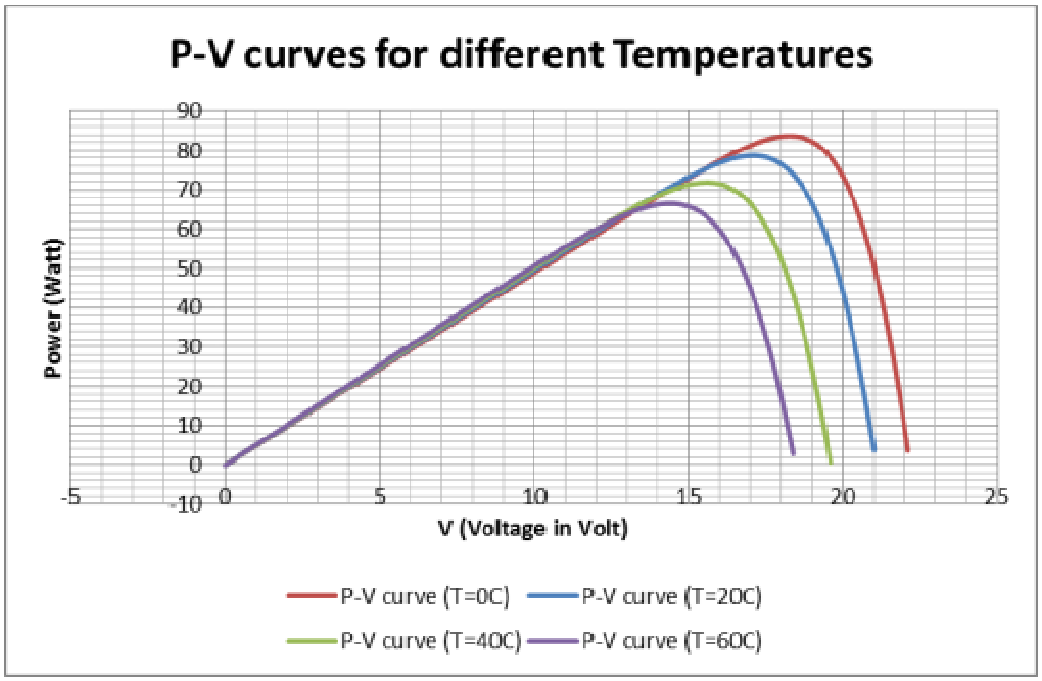

Fig. 19: P-V curves for different temperatures.

6.4 Characteristics of the I-V and P-V curves by varying the solar irradiance

The variation of the solar irradiance has a great effect on the output power and on the I-V and P-V curves. By varying the solar irradiance between 400 and 1000 W/m^2, and from the equations (6), (7), and (12) the characteristics of the I-V and P-V curves of the photovoltaic module are given in figure 20 and 21.

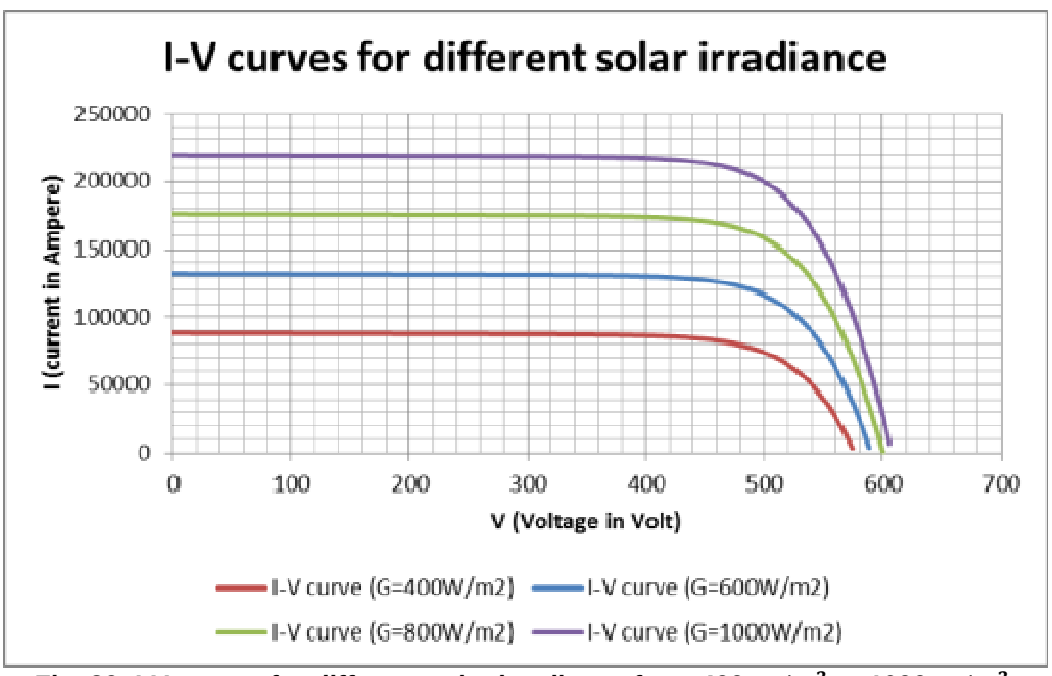

Fig. 20: I-V curves for different solar irradiance form 400 W/m^2 to 1000 W/m^2.

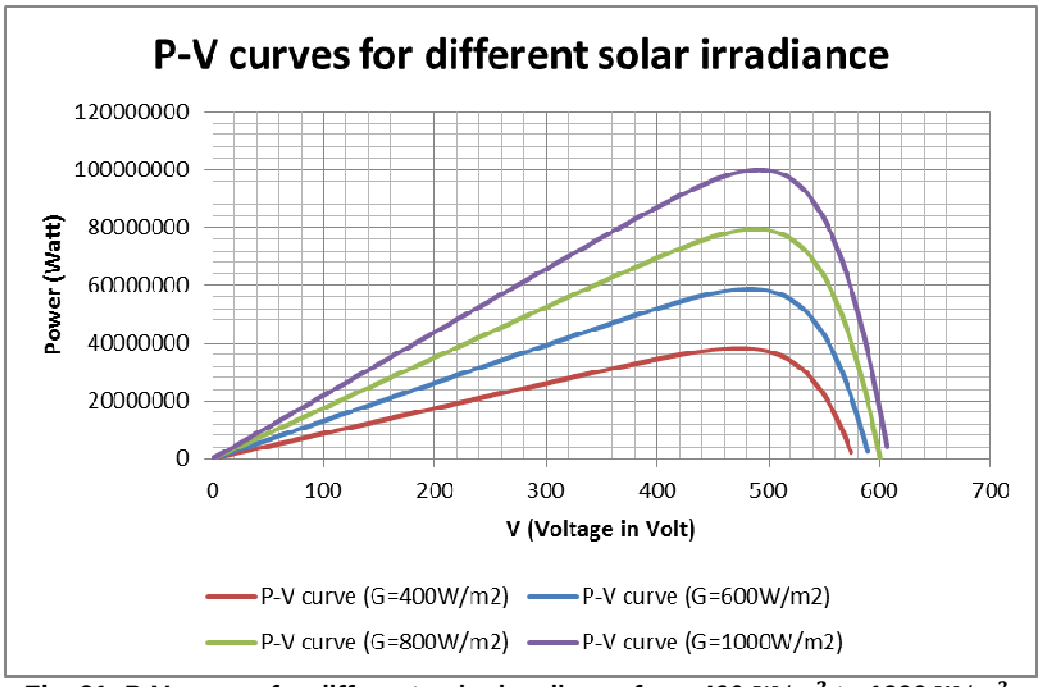

Fig. 21: P-V curves for different solar irradiance form 400 W/m^2 to 1000 W/m^2.

It should be noted that when the solar irradiance increase, the current, voltage and power increase for the same point on the x axis (Voltage axis).

7 ECONOMIC STUDY TO BUILD 100MW PHOTOVOLTAIC FARM IN LEBANON

As discussed in other countries [25-27], in this Section, an economic study of building photovoltaic farm of 100 MW in Lebanon is treated. Table 2 presents the necessary information to calculate the cost of the project.

Table 2: Economic study to build a photovoltaic farm of 100 MW in Lebanon.

Description	Values
•Cost to construct a Photovoltaic farm of 100MW	$ 250Million
•Engineering, test, miscellaneous and indirect cost (17% of the cost to construct a Photovoltaic farm)	$ 42.5Million
•Total Cost, excluding the cost of the land (sum of the first two costs)	$292.5 Million
•Annual Operation and Maintenance cost including the replacement of old parts and other costs (between 47 and 60$/kW)	$6.2 Million
•Total lifetime cost (Total cost of installation+(other costs per year *lifetime))	$447.5 Million (lifetime 25 years)
•Annual Production of energy (100MW * 365 days * 8h * 70% efficiency of PV panels)	204.4GWh [44]
•Electricity cost [Total lifetime cost/Produced energy during lifetime] (=$447.5 Million/204.4GWh)	0.08757$/kWh
•Cost of sold Electricity per year (=Electricity cost * Annual Production of energy)	$17,900,000

•Price of 1kWh to be sold (for a payback period of 10 years)	0.26$/kWh
•Price of 1kWh to be sold (for a payback period of 20 years)	0.19$/kWh
•Payback period [Investment/(Annual Gain-Annual cost)]	10 years
•Needed surface for the whole PV plant (for Monocrystalline Silicon cell technology)	1-2 km^2
•Net Present Value $NPV = G\left(\frac{1-\frac{1}{(1+i)^n}}{i}\right) - INV$,	
with i=6%, n=25 years[*1]	$160,669,975
with i=4%, n=25 years[*2]	$261,302,734
(For a payback period of 10years)	
•Net Present Value $NPV = G\left(\frac{1-\frac{1}{(1+i)^n}}{i}\right) - INV$,	
with i=6%, n=25 years[*1]	$-26,286,608.00
with i=4%, n=25 years[*2]	$32,829,814.83
(For a payback period of 20years)	
•Cost per square meter , excluding the cost of the land [total cost/needed surface]	146.25 $/$m^2$
•Cost per 1kW [total cost/nominal power] excluding the cost of the land	2925$/kW
•CO2 emission during lifetime (from construction to dismantling) per kWh	40-50g CO2/kWh [6]
•Lifetime of the Photovoltaic Panel	25 years

Note: the presented values in Table 2 may vary from one manufacturer to another, from one chosen material to another, from one contractor to another, and from one region to another, but in general, the indicated values give an idea about how approximately such project costs in Lebanon.

Example of calculation:
The cost of 1W of Photovoltaic Farm is approximately $2.5, for the mono-crystalline (refer to table 1), thus, the total cost of the PV Farm is 100,000,000(W)*2.5($)= $250 Million,
The Engineering, testing, and indirect cost is approximately equal to 17% of the total installation, thus, its value is equal to $ 42.5Million.
The Annual Operation and Maintenance is equal approximately 7% of the Total cost, thus, its value is equal to $20.475 Million. In the same way one can calculate other values.

Comparison between the Electricity from Photovoltaic farm, Power authority and private generators

In this subsection, a comparative study between the Electricity form Photovoltaic farm, Power authority, private generators and regional distributors is proposed (Table 3).

Table 3: Comparison between the electricity cost of Photovoltaic farm, Power Authority, Private Generator and Regional distributor.

•Source of Energy	Value of sold 1kWh
•Power Authority (EDL)	0.09333$/kWh
•Photovoltaic Farm	0.26$/kWh (ROI 10 years) 0.19$/kWh (ROI 20 years)
•Private Generator	0.3$/kWh
•Regional distributor	0.32$/kWh

In Table 3, the tariff of the Photovoltaic Farm can't be competitive with the Power Authority from EDL, because the tariff from EDL is not updated and it is based on a very ancient tariff when the price of one barrel was about $20, and it is very important that the EDL is losing every year about one billion dollars because its tariff is not updated, thus the tariff must be updated in order to impose the real price. But the tariff from PV Farm is very competitive with other sources of energy such as from Private Generator and Regional Distributor because its tariff is less than them, moreover the price of PV is decreasing every year and its efficiency is improving every year, thus it is very clear that the best solution in Lebanon is to install Photovoltaic Farm on the Lebanese scale and to install private PV panels on roofs of buildings which will deliver free energy from the sun without using traditional generators.

8 POSSIBLE IMPLEMENTATION OF PHOTOVOLTAIC IN SMALL COUNTRIES LIKE LEBANON

In small countries like Lebanon with a total area of 10,452 km^2, it is challenging to find a land to install a large plant such as the calculated one in this paper with a surface between 1 and 2 km^2, for a small amount of energy production such as 100MW. Therefore, it is important to find other solutions, and try to benefit from other surfaces such as lakes, rivers, top roofs of buildings, photovoltaics can be integrated in buildings in an aesthetic way, etc. in this section some solutions are proposed to resolve this problem.

8.1 Installation of Photovoltaic plant on lakes and rivers in Lebanon

In countries when rivers and lakes exist, one can install photovoltaic panels above the surface of the water as it is indicated in figure 22. This will lead to gain flat surfaces on the earth and use it for other things. The same design can be applied in hydroelectric power station where PV panels can be placed above the surface of the lake, in this way, one can produce electricity from two different sources, the first one is from the hydroelectric power station and the second one is from photovoltaics.

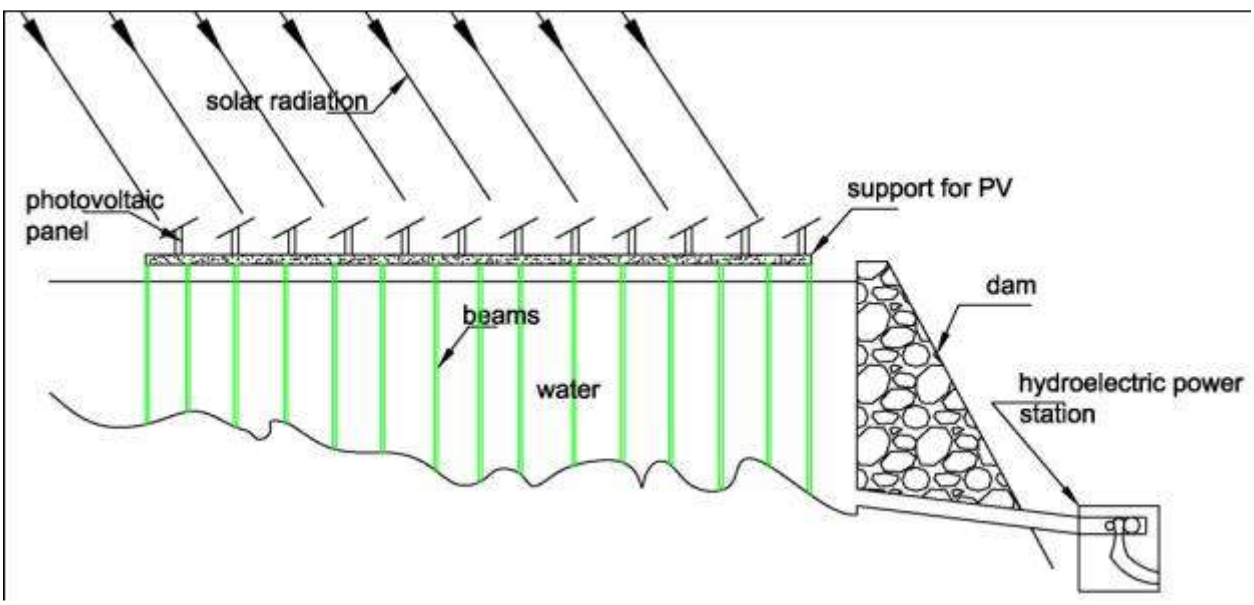

Fig. 22: Hybridization between photovoltaics and hydroelectric power station.

For the Lebanese case, due to lack of surfaces in Lebanon, it is possible to build PV Farm above rivers and lakes. For instance the surface of the lake Qaraoun is approximately 12km^2, which means it is possible to build PV Farm with a capacity of production between 600MW and 1200MW which is a large power for the Lebanese scale. For example, the Thermal Power production in Lebanon is 2.038GW [29], and from Hydraulic power plants is 220.6MW [29], which means if the PV Farm is installed only above the Qaraoun lake, it will produce about 26.5% to 53% of the total power installed in Lebanon. This is very important, because it will resolve the problem of electricity in Lebanon. The same concept can be applied on the surface of rivers in Lebanon, in fact many rivers are not used for any purpose, therefore, the utilization of these rivers may produce electricity which is necessary for the energy sector in Lebanon. For instance, Lebanon has 16 main rivers, with an estimated total length of 940km, and if we consider the average diameter of a river is 3 meters, we obtain a total surface of 2.8 km^2, which is a surface that we can build photovoltaic panels and produce power between 140MW and 280MW, which is approximately between 6.2% and 12.4% of the total consumed power in Lebanon. In conclusion, if the government benefits from the surface of rivers and lakes in Lebanon, it will produce approximately between 740MW and 1480MW which is an important source of free energy.

8.2 Vertical PV plant

Other solution is to install vertically Photovoltaic panels on buildings or create vertical walls where photovoltaics can be installed (figure 23), in this way a small surface produces a large amount of energy and the ratio Energy/Surface is very high. The cost of installation and reparation will be high, but this is the best solution to produce energy where large surface of lands are not available in a certain country or region.

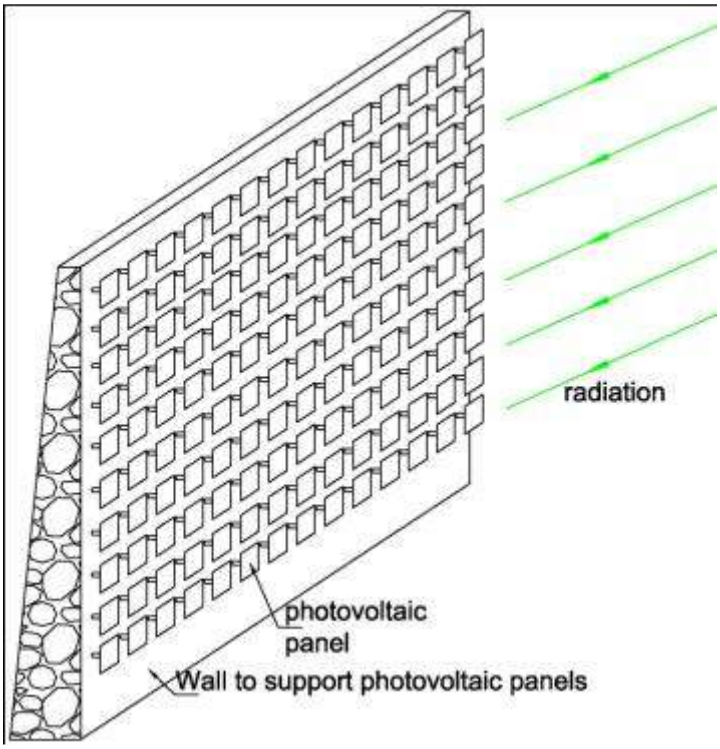

Fig. 23: vertical photovoltaic farm.

9 CONCLUSION

The photovoltaic system is preferred with respect to other source of energy. The future of photovoltaics is promising, the efficiency increase each year and it is expected to overpass 50% in the next decades, the price of photovoltaic system is decreasing which will give it advantages with respect to other renewable energy systems.

In conclusion, this paper presents a general review on photovoltaic system. The models and mathematical expressions of photovoltaic cells are presented. The MATLAB model of the standard expression of photovoltaic module is designed. The results are discussed, many characteristics such as I-V curves and P-V curves are simulated using different parameters. An economic study of building 100MW photovoltaic farm is presented and discussed. Finally, some propositions of the installation of PV panels above lakes and rivers in Lebanon can produce power about the half consumed power in the country, which is a very efficient way to produce energy using non utilized surfaces. This will resolve the problem of electricity in Lebanon.

10 NOMENCLATURES

C_{EG1} designs the temperature coefficient ($\approx 4.73 \cdot 10^{-4} eV/^0K$).

C_{EG2} is the temperature coefficient ($\approx 636^0K$).

C_{TI} is the coefficient representing the change of I_{SC} for each degree, it is expressed in $\%/^0C$.

C_{TV} presents the coefficient representing the change of V_{OC} for each degree, it is expressed in $V/^0C$.

dT designs the difference in temperature.

$E_g(0)$ presents the energy gap for the temperature $T = 0^0K$ ($\approx 1.17eV$ for Silicon).

I_{cell} is the output current of the PV cell.

$I_{L,cell}$ presents the light generated current produced by the incident light on the Photovoltaic cell.

$I_{O,cell}$ designs the internal p-n junction saturation current, its value is between 10^{-4} and 10^{-15} Ampere. It varies with the variation of the temperature.

$I_{module} = N_P I_{cell}$ is the module current.

$I_L = N_P I_{L,cell}$ presents the module current.

$I_O = N_P I_{O,cell}$ designs the total equivalent saturation current of the diode.

k is the Boltzmann's constant, it is equal to $1.3806488 \cdot 10^{-23} Joule/Kelvin$.

n_{cell} is the correction coefficient, its value is between 1 and 2, in this paper we take it equal to 1.6.

N_P is the number of parallel strings.

N_S is the number of cells per string.

$n = N_S n_{cell}$ presents the correction coefficient of the module.

q designs the elementary charge, it is equal to $1.60217 \cdot 10^{-19} Coulomb$.

$R_{S,cell}$ designs the series resistance of the photovoltaic cell. It includes all factors of resistance and the carriers' movement, its value is less than 1Ω.

$R_{SH,cell}$ is the shunt resistance of the photovoltaic cell. It represents the leakage of carriers due to recombination in different part of the cell, its value is greater than 1000Ω.

$R_S = \left(\frac{N_S}{N_P}\right) R_{S,cell}$ is the equivalent series resistance.

$R_{SH} = \left(\frac{N_S}{N_P}\right) R_{SH,cell}$ presents the equivalent shunt resistance.

T presents the temperature in Kelvin, (273.15+T^0C), standard temperature is 25^0C.

V_{cell} is the terminal voltage of the PV cell.

$V_T = \frac{kT}{q}$ presents the thermal voltage, its value is in Volt.

$V = N_S V_{cell}$ is the module voltage.
XTI is the temperature coefficient for the I_0 for the panel.

REFERENCES

[1] Luque A, Hegedus S. Handbook of Photovoltaic Science and Engineering. John Wiley & Sons Ltd; 2003.

[2] Hersch P. Basic photovoltaic principles and methods; February 1982.

[3] Trykozko R. principles of photovoltaic conversion of solar energy. Opto-electric revision, COSiW SEP, Warsaw, 1997; 5(4).

[4] Green MA. Photovoltaic principles. Physica E 14; 2002: 11–17.

[5] Markvart T. Photovoltaic solar energy conversion. European Summer University: Energy for Europe, Strasbourg; 7-14 July 2002.

[6] Markvart T, Castañer L. Practical Handbook of Photovoltaics, fundamentals and applications. Elsevier Ltd; 2003.

[7] Rikos E. Modeling of Photovoltaic Cells and Modules. Centre for Renewable Energy Sources Dept. of Photovoltaics and DER Systems. Power point presentation.

[8] Abdulkadir M, Samosir AS, Yatim AHM. Modeling and simulation based approach of photovoltaic system in Simulink model. ARPN Journal of Engineering and Applied Sciences. May 2012; 7(5).

[9] Da Silva RM, Fernandes JLM. Hybrid photovoltaic/thermal (PV/T) solar systems simulation with Simulink/Matlab. Solar Energy. 84. 2010: 1985-1996.

[10] Nishioka K, Sakitani N, Uraoka Y, Fuyuki F. Analysis of multicrystalline silicon solar cells by modified 3-diode equivalent circuit model taking leakage current through periphery into consideration. Solar Energy Materials and Solar Cells. 2007; 91(13): 1222-1227.

[11] Villalva MG, Gazoli JR, Filho ER. Comprehensive Approach to Modeling and Simulation of Photovoltaic Arrays. IEEE Transactions on power electronics. 2009; 24 (5).

[12] Bonkoungou D, Koalaga Z, Njomo D. Modelling and Simulation of photovoltaic module considering single-diode equivalent circuit model in MATLAB. International Journal of Emerging Technology and Advanced Engineering. March 2013; 3(3): 493-502.

[13] Jena C, Das A, Panigrahi CK, Basu M. Modelling and Simulation of Photovoltaic Module with Buck-Boost Converter. International Journal of Advanced Engineering and Nano Technology. February 2014; 1(3): 18-21.

[14] Belhaouas N, Ait Cheikh MS, Malek A, Larbes C. Matlab-Simulink of photovoltaic system based on a two-diode model simulator with shaded solar cells. Revue des Energies Renouvelables. 2013; 16(1): 65 – 73.

[15] Jiang Y, Qahouq JA, Orabi M. Matlab/Pspice Hybrid Simulation Modeling of Solar PV Cell/Module. Applied Power Electronics Conference and Exposition (APEC), 2011 Twenty-Sixth Annual IEEE. 2011: 1244– 1250.

[16] Salmi T, Bouzguenda M, Gastli A, Masmoudi A. MATLAB/Simulink Based Modelling of Solar Photovoltaic Cell. International Journal of Renewable Energy Research. 2012; 2(2): 213-218.

[17] Kachhiya K, Lokhande M, Patel M. MATLAB/Simulink Model of Solar PV Module and MPPT Algorithm. Proceedings of the National Conference on Recent Trends in Engineering and Technology. 2011.

[18] Chouder A, Silvestre S, Taghezouit B, Karatepe E. Monitoring, modelling and simulation of PV systems using LabVIEW. Solar Energy. May 2013; 91: 337-349.

[19] Abdulkadir M, Samosir AS, Yatim AHM. Modeling and Simulation of a Solar Photovoltaic System, Its Dynamics and Transient Characteristics in LABVIEW. International Journal of Power Electronics and Drive System. June 2013; 3(2): 185-192.

[20] Anonymous. Principe de fonctionnement de la cellule photovoltaïque. Accessed 09 May 2014. Available: http://tpeenergiephotovoltaique.e-monsite.com/pages/la-cellule-photovoltaique/principe-de-fonctionnement-de-la-cellule-photovoltaique.html.

[21] Anonymous. ReneSola achieves record third quarter results. plans 2011 capacity expansion. Accessed 10 May 2014. Available: http://www.pv-magazine.com/news/details/beitrag/renesola-achieves-record-third-quarter-results-plans-2011-capacity-expansion_100001519/#axzz2yZ5lQBx6, 2010.

[22] Anonymous: Module Circuit Design. Accessed 10 May 2014. Available: http://pveducation.org/pvcdrom/modules/module-circuit-design, 2014.

[23] Cheung N. Solar Cells Fabrication Technologies. Lecture 26, U.C. Berkeley, Available: http://www-inst.eecs.berkeley.edu/~ee143/fa10/lectures/Lec_26.pdf.

[24] Sahu TP, Dixit TV, Kumar R. Simulation and Analysis of Perturb and Observe MPPT Algorithm for PV Array Using ĊUK Converter. Advance in Electronic and Electric Engineering. 2014; 4(2): 213-224.

[25] Anonymous. Swaziland to construct 100 MW solar farm. Accessed 10 May 2014. Available: http://www.pv-magazine.com/news/details/beitrag/swaziland-to-construct-100-mw-solar-farm_100013261/#axzz2z98oXnPK. 2013.

[26] Anonymous. Scotland tops 100 MW solar milestone. Accessed 10 May 2014. available at: http://www.pv-magazine.com/news/details/beitrag/scotland-tops-100-mw-solar-milestone_100013799/#axzz2z98oXnPK. 2013.

[27] Anonymous. 100 MW Solar Farm For New South Wales. Accessed 10 May 2014. available: http://www.energymatters.com.au/index.php?main_page=news_article&article_id=1272. 2011.

[28] Anonymous. Grid-connected Photovoltaic System (GCPV), Solar Farm. Accessed 10 May 2014. Available: http://www.solarissolar.com.my/Grid-connected+Photovoltaic+System+%28GCPV%29_6_1.htm.

[29] Anonymous. Electricite du Liban official website. Thermal power plants, Accessed 10 May 2014. Available: http://www.edl.gov.lb/ABOUTEDL.htm

[30] Moubayed N, El-Ali A, Outbib R. A comparison of two MPPT techniques for PV system. WSEAS Transactions on Environment and Development. December 2009; 5(12): 770-779.

[31] Liu C, Wu B, Cheung R. Advanced Algorithm for MPPT Control of Photovoltaic Systems. Canadian Solar Buildings Conference, Montreal. August 20-24, 2004: 1-7.

[32] Ankaiah B, Nageswararao J. MPPT Algorithm for Solar Photovotaic Cell by Incremental Conductance Method. International Journal of Innovations in Engineering and Technology. February 2013; 2(1): 17-23.

[33] Xiao W, Dunford WG. A modified adaptive hill climbing MPPT method for photovoltaic power systems. in Conf. Rec. 2004 IEEE Annu. Power Electronics Specialists Conf. (PESC'04). June 2004; 3: 1957-1963.

[34] Hohm DP, Ropp ME. Comparative Study of Maximum Power Point Tracking Algorithms. Progress in Photovoltaics: Research and Applications. 2003; Vol. 11: 47-62.

[35] Chaudhari VA. Automatic Peak Power Tracker for Solar PV Modules Using dSpacer Software. in Maulana Azad National Institute Of Technology. vol. Degree of Master of Technology In Energy. Bhopal: Deemed University. 2005: 98.

[36] Zainudin HN, Mekhilef S. Comparison Study of Maximum Power Point Tracker Techniques for PV Systems. Proceedings of the 14th International Middle East Power Systems Conference (MEPCON'10). Cairo University, Egypt, December 2010: 19-21.

[37] Hohm DP, Ropp ME. Comparative Study of Maximum Power Point Tracking Algorithms Using an Experimental, Programmable, Maximum Power Point Tracking Test Bed. Photovoltaic Specialists Conference, 2000. Conference Record of the Twenty-Eighth IEEE. 2000:1699-1702.

[38] Masoum MAS, Dehbonei H, Fuchs EF. Theoretical and Experimental Analyses of Photovoltaic Systems With Voltage- and Current-Based Maximum Power-Point Tracking. IEEE Transactions on Energy Conversion. December 2002; 17(4).

[39] Lokanadham M, Bhaskar KV. Incremental Conductance Based Maximum Power Point Tracking (MPPT) for Photovoltaic System. International Journal of Engineering Research and Applications. Mar-Apr 2012; 2(2): 1420-1424.

[40] Tsai HL, Tu CS, Su YJ. Development of Generalized Photovoltaic Model Using MATLAB/SIMULINK. Proceedings of the World Congress on Engineering and Computer Science 2008 WCECS 2008. San Francisco, USA. October 22 - 24, 2008.