UNDER PEER REVIEW

An Age- Structured Model for the spread of Buruli ulcer : Analysis and Simulation in Ghana

Abstract

Despite the advances in medical research on treatment and the intensive public education on prevention and control, Buruli ulcer (BU) continues to be a major public health problem that continues to overwhelm authorities in Ghana. Ghana is the second most endemic country after the Ivory Coast at the global level. Whereas it is common knowledge in literature that the disease can affect people of all ages, the mode of transmission is still evasive. Traditional models for the spread of most diseases are derived from systems of ordinary differential equations. The disease dynamics of Buruli ulcer disease has something to do with age of humans, an age-structured model provides extra insights and the possibility to study the effects of treatment options. The studied model is expressed as a system of hyperbolic (first order) partial differential equations in addition to an ordinary differential equation. We first, employ a representation from the method of characteristics and a fixed point argument and also prove the existence and uniqueness of a solution to our nonlinear system. Then we present a numerical scheme to model the dynamics of BU.

Keywords: Buruli ulcer, SIR, Hyperbolic transport, Finite difference

Introduction

Buruli ulcer, also known as Bairnsdale ulcer is a chronic, indolent, and necrotizing disease of the skin tissue caused by Mycobacterium ulcerans [5] .WHO asserts that the disease usually begins as a painless nodule or papule and may progress to massive skin ulceration [9]. It also appears that different mode of transmission occurs in different geographical and epidemiological setting [19]. Though the disease can affect people of all ages, children less the 15 years of age are particularly more vulnerable in many tropical and subtropical countries [12]. Buruli ulcer causes serious pain as well as permanent physical damage. The physical signs visually mark the individual and depart them from societal standards of beauty.

The physical deformities may also unable the individual to participate in any economic and social activities. The study of Buruli ulcer continues to be an important problem in mathematical epidemiology as outbreaks of M. ulcerans continues to pose a public health challenge [1]. The transmission mode of the ulcer is not well explained, however residence near an aquatic environment has been identified as a risk factor for the ulcer in Africa [12, 1[illegible]. It appears that different mode of transmission occurs in different geographical and epidemiological setting [19]. In Africa, it is estimated that almost 30, 000 cases have been reported between 2005 and 2010 [14]. Buruli ulcer is severe disfigurng disease which affect all age group but particularly children

UNDER PEER REVIEW

less the 15 years of age in many tropical and subtropical countries [18] . The disease has emerged over the past two or more decades, especially in Central and West Africa and has been established by laboratory test in 26 countries with reports in other countries around the world [

The known common type of mode for the spread of an infectious disease is an SIR model and based on the categorization of individuals in the classes of susceptible, infected and removed populations. SIR models of Buruli ulcer developed at the moment are time dependent models which lead to system of ordinary differential equations (ODEs), see [2]. In order to model the pathway of infection clearly, we propose a model which considers the role of M.ulcerans introduced to the water reserves by disturbed environment.

Age is one of the vital characteristics in the modeling of populations and infectious disease. Different age groups of populations may have different reproduction and survival capacities. Disease may be in variation with respect to infection and mortality rate for different age groups [3]. In reality, individuals of varying age group may exhibit different behaviours and behavioural changes are vital in control and prevention of many infectious disease. Young individuals are known to be more active in interaction with or between population, and in disease transmissions. This paper therefore, in tends to use an age-structured model to study the spread of Buruli ulcer.

At heart of an age-structured model is a coupled system of hyperbolic partial differential equations (PDEs). The introduction of a system of PDEs instead of a system of ODEs gives rise to the interconnectivity of the problem greatly. Although using age-structured models to study the spread of diseases is not something new, however, to the best of our knowledge no such model has been proposed for the case of Buruli ulcer. The equation which accounts for the growth of the M.ucerans will not have age structure and therefore, remain as ODE.

Further background of age-structured models, we entreat readers to see [2 n respect to equilibrium analysis of an age-structured composition model, see [21].The existence results and formulation of age-structured models were introduced by Gurtin and MacCamy [16] and

UNDER PEER REVIEW

Venturino [11]. Barbu [15] developed mathematical theory behind age-structured populations. [3] studied nonlinear age-dependent population and predator prey dynamics.

This paper will develop an age-structured BU model and provide a theoretical and numerical analysis of the model. In subsequent sections, we will talk about the system of differential equations along with initial and boundary conditions that form our disease model. We further prove the existence and uniqueness of solution in L' and L^{∞} to our PDE system using a fixed point argument on a representation derived from the method of characteristics. We finally discuss the numerical methods and its implementation as well as conclusion.

This paper will develop an age-structured BU model and provide a theoretical and numerical analysis of the model. In subsequent sections, we will talk about the system of differential equations along with initial and boundary conditions that form our disease model. We further prove the existence and uniqueness of solution in L' and L^{∞} to our PDE system using a fixed point argument on a representation derived from the method of characteristics. We finally discuss the numerical methods and its implementation as well as conclusion.

2 The model and its analysis

2.1 Model formulation

We consider in a human population and divide into three subsections susceptible, infected and recovered. Within each category, we take into consideration both the age density and population changes over time. The number of humans in each subsection is expressed as $S = S(a,t)$, $I = I(a,t)$ and $R = R(a,t)$ as a functions of age a and time t. In order to use a dimensional approach in this model, we formally apply units of weeks for the age of humans a and days for the simulation time t. However, conventional units of years are also used in some instances to make matters clearer for the age of humans population. The number of susceptible people between, say age a1, and a2 at a time t is expressed as $\int_{a_1}^{a_2} S(a,t)da$ applying convectional understanding that all humans from $a = a_0$ year to $a = a_0 + 1$ year taken a_0 year old. Similar

UNDER PEER REVIEW

methods are also used for infected and recovered humans I (a, t) and R (a, t) respectively. We have one water bug compartment of infective Buruli ulcer bacteria denoted by $B_H = B_H$ (t). The four quantities S, I, R, B_H are dependent variable of the model. Buruli ulcer is considered as water borne disease and majority of transmission of the disease is through contact with contaminated water bodies. To put in various factors that influence the dynamics of a BU epidemic, we have initiated in the model and extra coefficient functions which maybe constant or may vary with age or time (or both). We take into consideration of disturbed environment such as stagnant water and human demographics include an recruitment term $\Lambda(a,t)$ along with natural death rate $\mu_H(a)$.

The possible interrelations between humans, the Mycobacterium ulcerans are represented by the schematic diagram below.

Model formulation

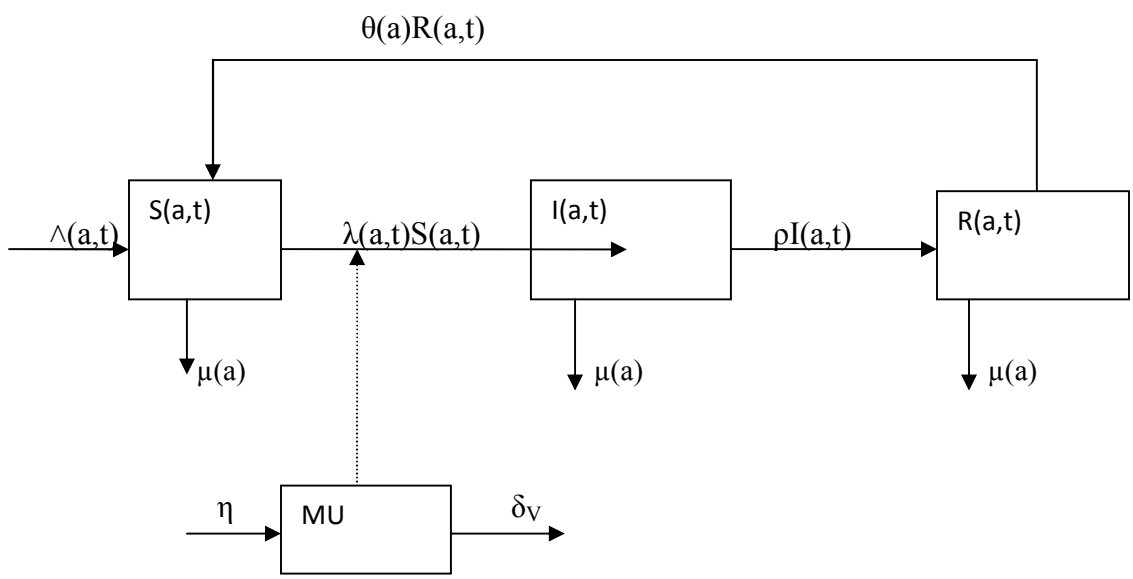

Figure 1: Proposed transmission dynamics of the Buruli ulcer between humans and MU in the environment.

The susceptible individuals turn to become infected through ingesting of M. ulcerans at rate B_H (a) with MU concentration measured with respect to infectious dose denoted by g_H. Individuals recover from BU at a rate $\theta(a)$ which depends on age. M. ulcerans bacteria experience a natural removal rate of δ_V due to death or predation. In this paper we include a strategy g(a, t) that can help reduce the spread of BU that

UNDER PEER REVIEW

represent antibiotic treatment. This reduces the duration and quantity of infected human's concentration to the concentration of M.ulcerans bacteria in the environment.

We are interested in investigating the existence of a solution to this nonlinear system using numerical concept. We study the age-time domain $P = (0, A) \times (0, \Omega)$ with intervention (g) in

$$\Omega = \left\{ (g) \in (L^{\infty}(Q))^2 \middle| 0 \le g(a,t) \le Bi.eP \right\} \tag{1}$$

where $B_1 < 1$ represent maximum fractions of intervention. The variables, (S, I, R, B_H), can be said to satisfy the system.

$$\frac{\partial S}{\partial t} + \alpha \frac{\partial S}{\partial a} = \Lambda(a,t) - \beta_H(a) \frac{B_H(t)}{k_H(a) + B_H(t)} S(a,t) - \mu_H(a) S(a,t) + \theta(a) R(a,t), \tag{2a}$$

$$\frac{\partial I}{\partial t} + \alpha \frac{\partial I}{\partial a} = \beta_H(a) \frac{B_H(t)}{k_H(a) + B_H(t)} S(a,t) - \mu_H(a) I(a,t) - \rho_1 (1 - g(a,t)) I(a,t) - \rho_2 g(a,t) I(a,t)$$

(2b)

$$\frac{\partial R}{\partial t} + \alpha \frac{\partial R}{\partial a} = \rho_1 (1 - g(a,t)) I(a,t) + \rho_2 g(a,t) I(a,t) - \mu_H(a) R(a,t) - \theta(a) R(a,t) \tag{2c}$$

$$\frac{d\beta_H}{dt} = \eta \beta_H(t) - \delta_V \beta_H(t) \tag{2d}$$

For the above equations $\alpha = \frac{1}{7} \frac{week}{days}$ is the coefficient introduced to balance the units of age a in weeks and time t in days. With respect to infected class, the multiplicative factors $\rho_1(1-g)$ and $\rho_2 g$ represent the rates of recovery for the individuals who have had no antibiotic treatment and those who have undergone such treatment respectively.

The Boundary and Initial Conditions

Buruli ulcer disease does not transmit vertically from parent to infants and therefore we can infer that they have some immunity. In this regards, newborns will appear in the R class in S, I,R model. This is significantly different from most S, I, R model. We translate this consideration to state the boundary conditions.

$$S(0,t) = 0, \tag{3a}$$

UNDER PEER REVIEW

$$I(0,t) = 0\,, \tag{3b}$$

$$R(0,t) = \int_0^A (S(a,t) + I(a,t) + R(a,t))da \tag{3c}$$

The initial conditions are stated as

$$S(a,0) = S_0(a)\,, I(a,0) = I_0(a)\,, R(a,0) = R_0(a) \text{ and } \beta_H(0) = \beta_H 0\,. \tag{4a}$$

Quantity	Descriptions
S(a, t)	susceptible humans of age a at t divided uniformly over all ages
I(a, t)	infected humans of age a at t
R(a, t)	removed and immune humans of age a at time t
[illegible]	Mycrobacterium ulcerans population
[illegible]	wave speed
Λ (a, t)	recruitment rate of number of susceptible humans entering population of age a at time
[illegible]	antibiotic treatment rate for humans of age a at time t
g(a, t)	ingestion rate of MU at age a
βH	rate of waning immunity of humans at age a
θ(a)	saturation constant of MU at age a
K_H	natural mortality rate of human at age a
μH	recovery rate of untreated Buruli ulcer
[illegible]	recovery rate of treated Buruli ulcer
[illegible]	the rate of MU contact with human getting reduced
[illegible]	[illegible]h rate of MU in the environment

Table 1: Model parameters and their respective units

Existence of the solution to the state system

We determine solution of the system using the method of characteristics see for example [22]. By using Bananch contraction mapping principle, we prove the existence and uniqueness of the solutions of the system. To compute the solution representation for the system (1a)-(1c), we add new notation for the right hand side of the partial differential equation (PDEs): a is age and t is time expressed in weeks and days respectively. $S(a,t)$ deals with susceptible human of age a at time t divided uniformly over all ages with a unit of human per week. $I(a,t)$ has to do with infected humans of age a at time t of human per week. The $R(a,t)$ represents removed and immune humans of age a at time t of human per week. The Mycobacterium ulcerans population

UNDER PEER REVIEW

is represented by B_H (t) of cells per ml. α is the proportionality factor and $\Lambda(a,t)$ is the recruitment rate of susceptible humans population of age a at time t per week. $K_H(a)$ is the saturation constant of MU age a one per day. μ(a) is the natural mortality rate of humans at age a of one per day. $\theta(a)$ is also deals with rate of waning of humans at age a per day. ρ_1 and ρ_2 are rate of untreated and treated Buruli ulcer per day. δ_V also explains death rate of MU in the environment per day. The antibiotic rate of treatment is denoted by g(a, t) for humans of age a at time t. η is the rate at which MU get contact with human in the environment per day.

We employ the method of characteristics to determine the existence of a solution of system state. We apply Banach contraction mapping principle to prove the existence and uniqueness of solution. In order to find solution of system (1.1) –(1.4), we create the following notation for the right hand sides of the partial differential equation (PDES)

$$f_1(B_H(t),S(a,t),R(a,t)) = \Lambda(a,t) - \beta_H(a)\frac{B_H(t)}{k_H(a)+B_H(t)}S(a,t) + \theta(a)R(a,t) \tag{5a}$$

$$f_2(B_H(t),S(a,t),I(a,t),g(a,t)) = \beta_H(a)\frac{B_H(t)}{k_H(a)+B_H(t)}S(a,t) - \rho_1(1-g(a,t))I(a,t) - \rho_2 g(a,t)I(a,t)$$

(5b)

$$f_3(S(a,t),I(a,t),R(a,t),g(a,t)) = \rho_1(1-g)(a,t))I(a,t) + \rho_2 g(a,t)I(a,t) - \theta(a)R(a,t) \tag{5c}$$

We note that the $\mu_H(a)S(a,t)$, $\mu_H(a)I(a,t)$ and $\mu_H(a)R(a,t)$ are not part of the f_i for $i=1,2,3$ terms. They are added in the left side of the three partial differential equations (4a)-(4c) to make use in the representation of the solution based on characteristics.

Let B be chosen such that

$$0 \le S_0(a), I_0(a), R_0(a),$$

$$\int_0^A S_0(a)da \le B, \int_0^A I_0(a)da \le B, \int_0^A R_0(a)da \le B,$$

UNDER PEER REVIEW

and $0 \le B_{H0} \le B$,

The state solution are defined as

$$Y = \{(S, I, R, B_H) \in (L^{\infty}(0,T; L'(0,A)))^3 \times (L^{\infty}(0,T))|$$

$$\begin{aligned} &\underset{t}{Sup}\int_0^A |S(a,t)|da \le 2B, \underset{t}{Sup}\int_0^A |I(a,t)|da \le 2B, \\ &\underset{t}{Sup}\int_0^A |R(a,t)|da \le 2B, |B_H(t)| \le 2B\} \end{aligned}$$

By applying the method of characteristics, we can determine the representation of the solution if exist and then use that result to build the map to be employed in our fixed point argument for existence and uniqueness. Now we define a map

$L : Y \to Y$ such that

$$(S, I, R, B_H) = (S, I, R, B_H)(g), L_3(S, I, R, \beta_H),$$

$$\begin{aligned} &S(a,t), I(a,t), R(a,t) B_H \\ &g \in \Omega \\ &(S, I, R, B_H) \\ &a < \alpha t < \alpha\Omega \\ &f_3 \\ &L : Y \to Y \end{aligned}$$

where L_1 is associated with equation (1a) and L_2 is associated with equation (1b) and where

UNDER PEER REVIEW

$$L_1(S,I,R,B_H)(a,t)=\begin{cases} e^{-\int_0^t \mu_H(\alpha\tau-\alpha t+a)d\tau} S_0(a-\alpha t) \\ +\int_0^t e^{-\int_s^t \mu_H(\alpha\tau-\alpha t+a)d\tau\times} \\ (f_1(B_H(s),S(\alpha s+a-\alpha t,s), \\ R(\alpha s+a-\alpha t,s)))ds \\ if a>\alpha t \\ \left(\frac{1}{\alpha}\right)\int_0^a e^{-\int_s^a \frac{\mu_H(\tau)}{\alpha}d\tau\times} \\ (f_1(B_H(\frac{s+\alpha t-a}{\alpha}),S(s,\frac{s+\alpha t-a}{\alpha}),R(s,\frac{s+\alpha t-a}{\alpha}))ds \\ if a<\alpha t, \end{cases}$$

$$L_2(S,I,R,B_H)(a,t)=\begin{cases} e^{-\int_0^t \mu_H(\alpha\tau-\alpha t+a)d\tau} I_0(a-\alpha t) \\ +\int_0^t e^{-\int_s^t \mu_H(\alpha\tau-\alpha t+a)d\tau\times} \\ (f_2(B_H(s),S(\alpha s+a-\alpha t,s),I(\alpha s+a-\alpha t,s) \\ g(\alpha s+a-\alpha t,s)ds \\ if a>\alpha t \\ \left(\frac{1}{\alpha}\right)\int_0^a e^{-\int_s^a \frac{\mu_H(\tau)}{\alpha}d\tau\times} \\ (f_2(B_H(\frac{s+\alpha t-a}{\alpha}),S(s,\frac{s+\alpha t-a}{\alpha}),I(s,\frac{s+\alpha t-a}{\alpha}),)ds \\ g(s,\frac{s+\alpha t-a}{\alpha}))ds \\ if a<\alpha t, \end{cases}$$

UNDER PEER REVIEW

$$L_3(S,I,R,B_H)(a,t)=\begin{cases} e^{-\int_0^t \mu_H(\alpha\tau-\alpha t+a)d\tau_{R_0(a-\alpha t)}} \\ +\int_0^t e^{-\int_s^t \mu_H(\alpha\tau-\alpha t+a)d\tau\times} \\ f_3(S(\alpha s+a-\alpha t,s),I(\alpha s+a-\alpha t,s),R(\alpha s+a-\alpha t,s) \\ g(\alpha s+a-\alpha t,s)))ds \\ if a>\alpha t \\ \left(\frac{1}{\alpha}\right)\int_0^a e^{-\int_s^a \frac{\mu_H(\tau)}{\alpha}d\tau\times} \\ (f_3(S(s,\frac{s+\alpha t-a}{\alpha}),I(s,\frac{s+\alpha t-a}{\alpha}),R(s,\frac{s+\alpha t-a}{\alpha}))ds \\ g(s,\frac{s+\alpha t-a}{\alpha}))ds \\ if a<\alpha t, \end{cases}$$

with $L_4(S,I,R,B_H)(t)=B_{H0}e^{-\delta_L t}+\int_0^t \eta e^{-\delta_L(t-s)B_H(s)ds.}$ (6)

We derive the fixed point of the map L, meeting the conditions

Proof. We wish to prove that the map $L_4(S,I,R,B_H)=(L_1,L_2,L_3,L_4)(S,I,R,B_H)$ with everyone of $S(a,t),I(a,t),R(a,t)$ and B_H being positive will be a solution $(S,I,R,B_H)=(S,I,R,B_H)(g)$ to the system of the model.

Theorem (Existence and Uniqueness of solution). For $g\in\Omega$ as defined in (1) and Ω sufficiently small, there exists a unique solution (S,I,R,B_H) to the system 2 – 2d with boundary and initial conditions 3a –3c and 4

Proof : We prove that the map

$$L:Y\to Y$$

state above is a strict contraction. Note that the function f_1, f_2 and f_3 used in the SIR equations are Lipschitz in their arguments with the Lipschitz constants base on coefficients and parameters from our model and also on B, an addition to the bounds on S, I,R from the set Y .

UNDER PEER REVIEW

In order to show that L maps Y into Y , from the definition of the map L, we give the definition of the Li functions for i = 1, 2, 3 leads

$$\int_0^A \left|L_i(S,I,R,B_H)\right|(a,t)da \le D_1 B\Omega + B \le 2B$$

where the single B in the first inequality obtain from the bound of $\int_0^A S_0(a)da, \int_0^A I_0(a)da,$ or $\int_0^A R_0(a)da,$ respectively for $i = 1,2,3$. By the fact Ω is sufficiently minimal, then we state that the above estimate is less than or equal to 2B. In an addition for j = 1, 2, 3, we obtain $\left|L_j(S,I,R,B_H)\right| \le \max\{B_{H0}\} + D_2 B\Omega \le 2B$ .The constants D_1 and D_2 hinge upon the coefficients and the parameters in the model. Also for Ω to be sufficiently small, we get estimate above and hence, we state that the L maps Y into Y. Note that for the contraction property, for i = 1, 2, 3, we take into account the fact that $\int_0^A \left|L_i(S_1,I_1,R_1,B_{H1}) - L_i(S_2,I_2,R_2,B_{H2})\right|(a,t)da.$ There is a need to examine some of the terms on the model such as $\beta_H(a)\dfrac{B_H(t)}{k_H(a)+B_H(t)}S(a,t)$ and in specific their differences. For instance, we can state

$$\frac{B_{H1}(t)}{k_H(a)+B_H(t)}\left|S_1 - S_2\right|(a,t) + \frac{S_2(a,t)k_H\left|B_{H1}-B_{H2}\right|(t)}{k_H + B_{H1}(t))(k_H + B_{H2}(t))} \tag{7}$$

and consider from equations (3.1) and (3.2). In order to make things simple, we show to estimate such a term for $a > \alpha t$ in $L_1(S, I,R, B_H)(a, t)$

$$\int_0^A\int_0^A e^{-\int_0^t \mu_H(\alpha\tau - \alpha t + a)d\tau \times}$$

$$B_H(\alpha s + a - \alpha t, s)(\frac{B_{H2}(s)}{k_H + B_{H2}(s)}\left|S_2 - S_1\right|(\alpha s + a - \alpha t, s)$$

$$+\frac{S_1(\alpha s + a - \alpha t, s)k_H\left|B_{H2} - B_{H1}\right|(s)}{(k_H + B_{H1}(s))(k_H + B_{H2}(s))}$$

$$+\theta(\alpha s + a - \alpha t, s)(R_2 - R_1)(\alpha s + a - \alpha t, s)\Big|dsda$$

Note that we let $s_1 = \alpha(s-t) + a$ and $s_2 = s$, then $0 < -\alpha t + a < \alpha(s-t) + a < a$ or $0 < (s-t) + a < A$ and $0 \le s_2 < \Omega$. In addition, the Jacobian for this transformation attains finite. Hence, we can now bound the estimate above by

UNDER PEER REVIEW

$$\int_0^T\int_0^A D_3\left|S_2-S_1\right|(s_1,s_2)+D_4\left|R_2-R_1\right|(s_1,s_2)ds_1ds_2$$

$$+D_5\int_0^T\int_0^A\left|S_1(s_1,s_2)\right|ds_1\{\left|B_{H2}(s_2)-B_{H1}(s_2)\right|ds_2\}$$

$$\leq D_6\Omega\sup_t\int_0^A\left(\left|S_2-S_1\right|+\left|R_2-R_1\right|\right)(a,t)da$$

$$+D_7N\Omega\sup_t\left[\left|B_{H2}-B_{H1}\right|(t)\right]$$

In the above equations, we have substituted S1 and S2 by a and t respectively. Again, the constants Dk for k = 3, ...7 depend on the bounds of the coefficients. For terms that consist of the fractional parts, we have employed the 2B bound for the terms made up of the Si for i = 1, 2 in the second term of 7 for integrals over (0,A)×(0, t) when $a>\alpha t$ or for integrals over (0,A) × (0, a) when $a<\alpha t<\alpha\Omega$. We can determine these estimates which leads

$$\int_0^A\left|L_1(S_1,I_1,R_1,B_{H1})-L_1(S_2,I_2,R_2,B_{H2})\right|(a,t)da$$

$$\leq D_8\Omega\sup_t\int_0^A\left(\left|S_2-S_1\right|+\left|R_2-R_1\right|\right)(a,t)da+D_9N\Omega\sup_t\left[\left|B_{H2}-B_{H1}\right|(t)\right]$$

Similarly we estimate for $j=2,3$ and for $j=4,5$ we have

$$\left|L_j(S_1,I_1,R_1,B_{H1})-L_j(S_2,I_2,R_2,B_{H2})\right|(t)$$

$$\leq\Omega\sup_t\int_0^A\left|I_1-I_2\right|(a,t)da+D_{10}\Omega\sup_t\left|B_{H1}-B_{H2}\right|(t)$$

$$\left|L_j(S_1,I_1,R_1,B_{H1})-L_j(S_2,I_2,R_2,B_{H2})\right|(t)$$
$$\leq\Omega\sup_t\int_0^A\left|I_1-I_2\right|(a,t)da+D_{10}\Omega\sup_t\left|B_{H1}-B_{H2}\right|(t)$$

where D_{10} has to do with η and δ.

UNDER PEER REVIEW

By putting the work and carefully selecting Ω sufficiently small, we obtain the contraction result and therefore , desire fixed point to the system 2 –2d.

4. Numerical Simulations

We state briefly the numerical method employed in our simulations. The equations for the quantities S, I and R from 2 —2c from hyperbolic system of PDEs; in addition to these, we have one ODE for BH from 2d. Our choice of numerical method is a forward time/ backward space finite difference [17]. For the convenience of our model, we use the scalar one- way wave equation.

$$\frac{\partial u}{\partial t} + \alpha \frac{\partial u}{\partial a} = f(a,t)$$

where α is a constant (that is the wave speed), and t and x denote time and space, respectively. The forward time/backward space scheme [17] for the above model is expressed as

$$\frac{f_m^{n+1} - f_m^n}{\Delta t} - \alpha \frac{f_m^n - f_{m-1}^n}{\Delta x} = q(x_m, x_n),$$

where n stands for the time index and m the space index in the time and space grid. We note that any explicit scheme is only conditionally stable [17]. The stability of our scheme is achieved by applying Counrant-Friedrids-Levy (CFL) condition [17] to ensure a necessary and sufficient condition and satisfies that

$$\left| \alpha \frac{\Delta x}{\Delta t} \right| \le 1$$

For a given spatial discretization Δx, this produces a restriction on the time step as $\Delta t \le \Delta x / |\alpha|$

5 Computational Experiments and Results

Buruli ulcer disease requires more antibiotic in children than adults, we model the rate of loosing immunity of humans at age a by

$$\theta(a) = \begin{cases} 1/365 \, for a \le 15 \, year \\ 1/2.363 \, for a > 15 \, year \end{cases}$$

The rate of waning is important because it influences our choice of initial conditions

UNDER PEER REVIEW

6 The reference Simulation with no Infected Population

We assumed a pool of 20, 000 humans distributed uniformly over the age range $0 \le \alpha \le A$, for all ages a at t = 0. Therefore, all 20, 000 humans are distributed to the susceptible and removed classes. Based on the rate of losing immunity conditions for children and adult, it requires for a year a newborn baby to lose his or her immunity and become susceptible to Buruli ulcer. In this regard, we initialize everyone with age less than or equal to one year old in the removed section and everyone older than one year old in susceptible section. This leads to the initial conditions

$$S(a,0) = \begin{cases} 0 if\, 0 \le a \le 40 weeks \\ dif a > 40 weks \end{cases}$$

$$R(a,0) = \begin{cases} 0 if\, 0 \le a \le 40 weeks \\ dif a > 40 weks \end{cases}$$

for the susceptible and removed population, respectively. The numerical value of the age density d in the initial conditions depends on the number of humans and the numerical resolution of the age variable.

By applying numerical and having age resolution in weeks, we will then have to have a fixed density d for each age for $0 \le \alpha \le 40$, given by

$$d = \frac{20,000(humans)}{50(weeks/year) \times 60(year)} \approx 8.33 humans/weeks$$

Parameter	Value/Range	Sources
Λ (a, t)	0	Estimated
g(a, t)	0.8	Estimated
B_H	1.5/7	[2]
k_H	10^5	Estimated
[illegible]	0.00065	[2]
g_H	105/600	Estimated
[illegible]	0.45	[2]
[illegible]	1/5	Estimated
[illegible]	1/3	Estimated
[illegible]	1/5	Estimated

Table 2: Parameter values used for the simulations and sensitivity analysis

This provides the values of d in the initial conditions for S(a, 0) and R(a, 0). Given the age resolution of 1 week, that at the initial time with constant density d, this leads 40 _ 333 humans of each age a. In order words, we are saying that 20, 000 total humans are distributed to the ages 0 to 60 uniformly as $20,000/60 \approx 333$ humans

UNDER PEER REVIEW

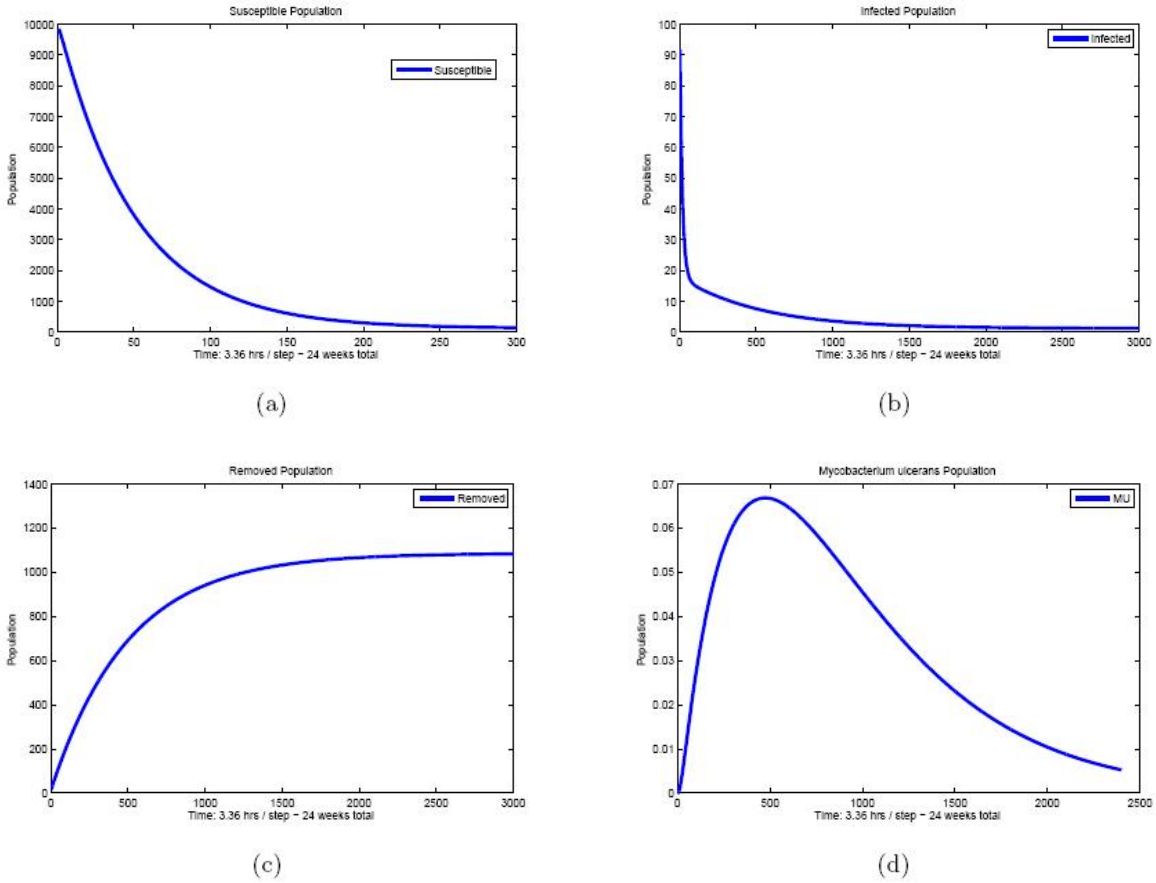

Figure 2: Shows simulations of BU with susceptible, infected population and recovered population dynamics over time.

In Figure 2 above, we show the dynamics in the total population, susceptible population, infected population, and recovered population over time. We note here, the decrease in the susceptible population, which is attributed to humans who passed away of natural causes during the period-line of the simulation. Furthermore, we notice an increase in recovered population, which is partly due to antibiotic and partly due to natural recovery of MU by humans.

This however, takes sometime for human to lose immunity to get back to susceptible class and is governed by the rate of waning of immunity. In Figure 2b we see that the infection reduced with respect to time and this could be infer from people getting awareness of MU and antibiotic medications which is now available to BU patients. Even though there is no epidemic in this simulation, our model indicates more than just the population dynamics. Our three-dimensional surface plots in Figure3 depict the advantages of this age-structured model even in this basic

UNDER PEER REVIEW

simulation. Each plot in Figure3 indicates the number of humans at an age a in years at time t in weeks; the color provides the same information as the height of surface. The number of humans at a particular age is calculated by integrating each density, for instance S(a, t) from a years to $a+1$ years by $\int_{a}^{a+1} S(\bar{a},t)d\bar{a}$ constituting the basic apprehension that humans from age a to

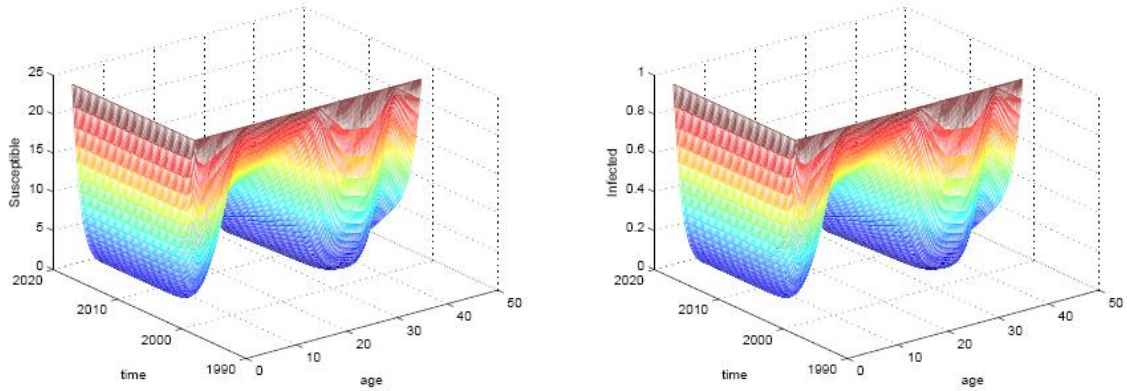

(a) (b)

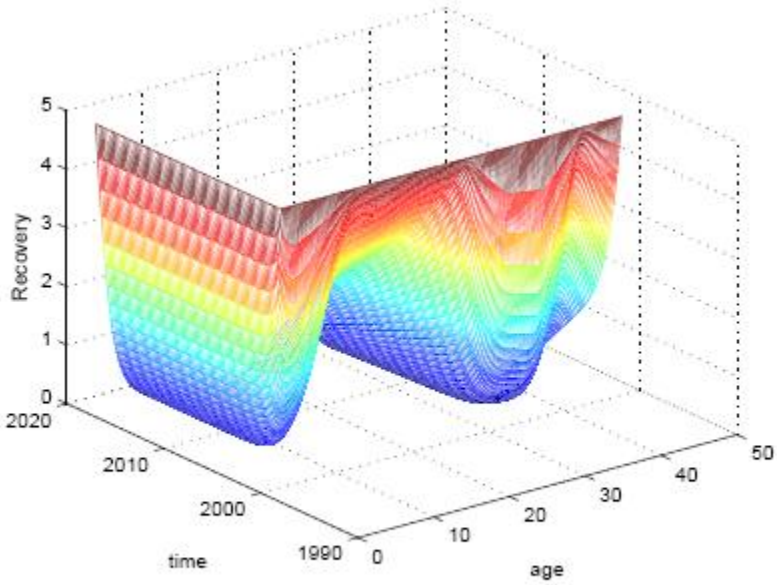

(c)

Figure 3: Shows simulation of BU with susceptible, infected population and recovered population dynamics as function of age and time

UNDER PEER REVIEW

are taken to be a years old. Notice that we use a resolution of 1 week in age, thus at the initial time with constant density d, this leads $52 \approx 120$ humans of each age a. We also examined the dynamics of BH over time which is shown in Figures 2(d). It depicts a peak within few days of the spread of BU and this is due to the fact that initially people do not pay attention to the environment hence a greater accumulation in the entire area in the curve under consideration.

To make excessive use our PDE model, we can observe at the model quantities in Figure3 which indicate how the quantities vary over time across different age groups. For instance, in Figure 3, in the surface plot of the susceptible, infected and recovered population, the height (the vertical coordinate) at point (a, t) is the number of susceptible, infected and recovered people of age a at time t as the height of surface respectively. Since the susceptible and infected populations decline, as anticipated, the recovered rise over time and age. We note that due to natural recovery and antibiotic given, the recovered increase. There is a decrease in both Figure 3(a) and 3(b) as assumed to crop up as a result of medication and long duration for human to who have recovered to warn their immunity. We note a rise in the Figure 3(c) due to high recovery rate based on natural and antibiotic medications.

7. Conclusion

An age-structured model can model the infection pathway of Buruli ulcer more accurately, since the risk for contracting the disease has something to do with the age of a human. We observe that introducing age as another independent variable encompasses solving a system of partial differential equations instead of simpler ordinary different equation systems and this brings in new challenges for the existence of a solution of the system and for the numerical method. We also present our existence result for the PDE system applying a fixed point argument. The simulation with only time depend on SIR model are presented. We present numerical simulation on both age and time he dynamics of BU disease. We also observe that Mycobacterium ulcrans spread is facilitated by the behaviour of human. The inclusion of treatment control strategies in an age-structured Buruli ulcer model will help in further explanation of the dynamics of BU.

References

[1] Asiedu, K., Etuaful S. 1998. Socio-economic implications of Buruli ulcer in Ghana: a three- year review. AmJ Trop Med Hyg , 59(6):1015-1022.

UNDER PEER REVIEW

[2] Aidoo, A.Y., OSei, B. 2007. Prevalence of aquatic insects and arsenic concentration deter- mine the geographical distribution of Mycobacterium ulcerans

[3] Anderson.R.M., May.R.M.Infectious disease of humans, dynamics and control. Oxford university press, 1991 infection, Computational and Mathematical Methods in Medicine 8, 235 244.

[4] Ainseba ,B., Langlais M. 2000. On a population dynamics control problem with age dependence and spatial structure, J. Math. Anal. Appl. 248 (2), 455474

[5] Duker ,A. A, Portaels, F., Hale, M. 2006. Pathways of Mycobacterium ulcerans infection: A review.Environment International 32: 56717573. Duker A.A., Carranza E.J.M., Hale

M.(2005). Spatial relationship between arsenic in drinking water and Mycobacterium ulcerans infection in the Amansie West district, Ghana. Mineral Mag 69:707-717

[6] Cushing, J. 988. An Introduction to Structured Population Dynamics, SIAM.

[7] Strikwerda J. 2004. Finite difference schemes and partial differential equations,2nd edition, SIAM.

[8] Webb, G. 1985. Theory of Non-linear Age-Dependent Population Dynamics, Marcel Dekker,New York.

[9] Bonyah, E ., Owusu-Sekyere E . 2012. Modelling of Buruli Ulcer Prevalence in Amansie West District, Ghana. International Journal of Sciences (ISSN 2305-3925)

[10] Saleem, M. 1984. Predator-prey relationships: indiscriminate predation dynamics, J. Math.Biol. 21, 2534.

[11] Venturino, E. 1984. Age-structured predator-prey models, Math. Modelling 5 (1984), 117128.

[12] Jacobsen K.H., Padgett J.J. 2010. Risk factors for Mycobacterium ulcerans infection. Int J Infect Dis. 14(8):e677.

[13] Debacker, M., Portaels, F., Aguiar, J., Steunou, C., Zinsou ,C., Meyers ,W. 2006. Risk factors for Buruli ulcer, Benin. Emerg Infect Dis, 12, 1325.

[14] World Health Organization. Buruli ulcer: Number of new cases of Buruli ulcer reported (per year).

[15] Barbu, V. 1994. Mathematical methods in optimization of differential systems, Kluwer Academic Publishers, Dordrecht.

[16] ., Gurtin, M. E., MacCamy,R.C. 1974. Nonlinear age-dependent population dynamics, Arch. Rational Mech. Anal.

[17] Strikwerda, J. 2004. Finite difference schemes and partial differential equations, 2nd editon,

[18] Janssens, P., Pattyn, S.R,, Meyers, W.M., Portaels F. 2005. Buruli ulcer: a historical overview with updating to 2005. Bull Seances Acad R Sci Outre Mer 51: 265-299 SIAM,14

[19] World Health Organization. Buruli Ulcer (2001). Diagnosis of Mycobacterium ulcerans Dis- ease.

UNDER PEER REVIEW

[20] Saleem, M.1984. Predator-prey relationships: indiscriminate predation dynamics, J. Math. Biol. 21.

[21] Gopalsamy, K. 1982. Age-specific coexistence in two-species competition, Math. Biosc. 61.

[22] Webb, G. 1985. Theory of Nonlinear Age-Dependent Population Dynamics, Marcel Dekker, New York.