UNDER PEER REVIEW

# Vaccination Dynamics of Chickenpox in Agona West Municipality, Ghana

**Abstract**

The study shown that chickenpox cases in recent times have increased in Agona West Municipality with $R_0 \approx 2$. We estimated the reproductive number of chickenpox with vaccination to be $R_o = 0.3 < 1$ which shows that after vaccination, the disease will die out. We estimated that 46.2% corresponding to 53,241 of the people needs to be vaccinated in order to control the chickenpox. The stability analysis of disease free and endemic equilibrium point of chickenpox transmission with vaccination was estimated to be unstable and asymptotically stable. Sensitivity analysis of the SEIR model with vaccination showed that when the vaccination rate coefficient is increase chickenpox will be under control.

**Keywords**

Chickenpox, equilibrium point, transmission, stability, vaccination, Varicella-Zoster-Virus (VZV)

## 1.0 Introduction

Chickenpox (Varicella) is a highly transmissible infection caused by Varicella-Zoster-Virus (VZV), a DNA virus of the Herpes group transmitted by direct contact with infective individuals. In Europe, 90% of children get infected with VZV before 12 years of age and around 95% of adults are immune to VZV (Nardone et al, 2007). Chickenpox is characterized by vesicular skin

UNDER PEER REVIEW

lesions, fever, mild fatigue and general malaise. The primary infection with Varicella - Zoster Virus (VZV) causes Chickenpox. It is associated with pain and body itching (NCIRS, 2009).

Chickenpox (Varicella) vaccine is a live attenuated viral vaccine derived from the Oka strain of VZV. The vaccine virus was isolated by Takahashi in the early 1970s from vesicular fluid from a healthy child with varicella disease. Varicella vaccine was licensed for general use in Japan and Korea in 1988 and later licensed in the United States in 1995 for persons who are 12 months of age and older. The virus was attenuated by sequential passage in human embryonic lung cell culture, embryonic guinea pig fibroblasts and in WI-38 human diploid cells. The Oka (Merck) vaccine has undergone further passage through MRC-5 human diploid cell cultures for a total of 31 passages (MMWR, 2006).

The component of the vaccine contains small amounts of sucrose, processed porcine gelatin, sodium chloride, monosodium L-glutamate, sodium diphosphate, potassium phosphate and potassium chloride and trace quantities of residual components of MRC-5 cells, EDTA, neomycin and fetal bovine serum. The vaccine contains no preservative and reconstituted with sterile water (Leslie, 2009).

Esson, 2013, studied the epidemiology of chickenpox in Agona West Municipality and estimated the endemicity of chickenpox with $R_0 = 2$ and Mathematical models for the vaccination dynamics of chickenpox and how the chickenpox can be controlled in the Municipality are not known. This study therefore uses SEIR model with vaccination to model the vaccination dynamics in the Municipality. Differential equations applications are used extensively in many facets [9,10,11,12,13].

UNDER PEER REVIEW

## 2.0 Methodology

The population used for this study is Agona West Municipal and the data was obtained from Agona West Municipal Health Directorate. We used SEIR model with vaccination to model the vaccination dynamics of chickenpox. Ordinary differential equations[ ] were used to formulate the model equations. Stability and Sensitivity analysis was performed on the model equations and Matlab software was used for the graph simulation.

## 2.1 Mathematical model

In the SEIR model, the total population is divided into four separate groups: Susceptible (S), Exposed (E), Infective (I) and Recovered (R). Susceptible people can contract the disease if they come into contact with the chickenpox, while those in the exposed group are individuals infected but not yet infectious with the chickenpox and are not able to pass the chickenpox to others. Infective are the individuals that are infectious and capable of transmitting the infection to any susceptible that they come in contact and those in the recovered compartment are individuals previously infected but now neither infected nor susceptible. They have an infection-acquired immunity (permanent immunity). The proportion of individuals in each compartment S,E,I and R at time t is given as S(t), E(t), I(t) and R(t).The figure below is the flow chart of the SEIR model with vaccination.

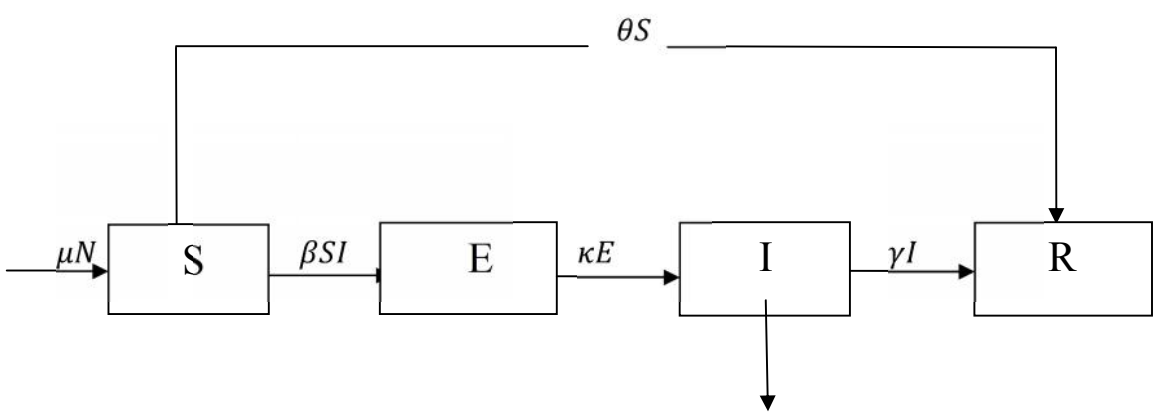

UNDER PEER REVIEW

$\downarrow \mu S$ $\downarrow \mu E$ $\mu R$ $\downarrow \mu R$

Figure 3.2: Flow chart of SEIR of chickenpox transmission with vaccination

Where

$\mu N =$ Birth rate of susceptible population, $\theta =$ Vaccinated rate coefficient, $\beta =$ Infection rate, $\kappa =$ Latency rate, $\gamma =$ Recovery rate and $\mu =$ Natural death rate.

The model equations (Anderson and May, 1991) for chickenpox with vaccination are as follows

$$\frac{dS}{dt} = \mu N - \beta SI - \mu S - \theta S \quad (1)$$

$$\frac{dE}{dt} = \beta SI - \mu E - \kappa E \quad (2)$$

$$\frac{dI}{dt} = \kappa E - \mu I - \gamma I \quad (3)$$

$$\frac{dR}{dt} = I\gamma - \mu R + \theta S \quad (4)$$

We estimated the reproductive number $(R_0)$ of chickenpox with vaccination using the next generation matrix as $(R_0) = \frac{\beta\kappa}{(\mu+k)(\mu+\gamma)}$. The reproductive number $(R_0)$ is defined as the expected number of secondary infections arising from a single individual during his or her entire infectious period in a population of susceptible (Heffernan et al, 2005).

The reproductive number ($R_o$) is a threshold that determines whether a disease will spread in a population or dies out. Whenever $R_o$ is >1, the disease will spread in a population leading to an epidemic and on average an infected individual produces less than one new infected individual over the course of its infectious period and the infection populate. If $R_o$ is < 1, the disease will die out in the population and each infected individual produces on average more than one new infection and the disease will invade the population. ( Van den Driessche and watmough, 2002 ).

The equilibrium point of chickenpox with vaccination is $(S^*, E^*, I^*, R^*) =$

UNDER PEER REVIEW

$$\left(\frac{(\mu+\gamma)(\mu+k)}{\beta k}, \frac{\mu\beta kN-(\mu+\theta)(\mu+\gamma)(\mu+k)}{\beta k(\mu+k)}, \frac{\mu\beta kN-(\mu+\theta)(\mu+\gamma)(\mu+k)}{\beta k(\mu+\gamma)(\mu+k)}, \frac{\mu\gamma\beta kN-\gamma k(\mu+\theta)(\mu+\gamma)(\mu+k)+\theta((\mu+k)(\mu+\gamma))^2}{\mu\beta k(\mu+\gamma)(\mu+k)}\right)$$

The stability analysis of the disease free and the endemic equilibrium point of the model with vaccination are given by $J-\lambda I = \begin{vmatrix} -(\mu+\theta)-\lambda & 0 & -\beta & 0 \\ 0 & -(\mu+k)-\lambda & \beta & 0 \\ 0 & k & -(\mu+\gamma)-\lambda & 0 \\ \theta & 0 & \gamma & -\mu-\lambda \end{vmatrix}$

and $J-\lambda I = \begin{vmatrix} -\beta I-(\mu+\theta)-\lambda & 0 & -\beta S \\ \beta I & -(\mu+k)-\lambda & \beta S \\ 0 & k & -(\mu+\gamma)-\lambda \end{vmatrix}$

The eigenvalues of the matrix for the disease free and the endemic equilibrium point of chickenpox with vaccination are $\lambda = -\beta I-(\mu+\theta), \lambda = -(\mu+k)$ and $\lambda = -(\mu+\gamma)$

**3.0 Results and Discussion**

In this study, we estimated the parameter values from the data obtained from the Agona West Municipal Health Directorate as follows Transmission rate $(\beta) = 0.026$, Latency rate $(\kappa) = 0.036$, Recovery rate $(\gamma) = 0.014$, Death rate $(\mu) = 0.02$, Vaccinated rate coefficient $(\theta) = 0.00019$ and Population (N)= 115,358

From the studies we estimated the reproductive number of chickenpox with vaccination to be $R_o = 0.3 < 1$ which shows that after vaccination, the chickenpox will die out and will not populate. We estimated that 53,241 out of 115,358 people needs to be vaccinated against chickenpox and this corresponds to 46.2% of the Agona West Municipality needs to be vaccinated in order to control the chickenpox. We estimated the stability analysis of disease free and endemic equilibrium point with vaccination to be unstable and asymptotically stable.

Sensitivity analysis of SEIR model with vaccination showed that the susceptible population decreases sharply with time while the infective and recovered population also decreases

UNDER PEER REVIEW

asymptotically when the value of transmission rate $(\beta)$ was varied from 0.08 to 0.65 as time increases.

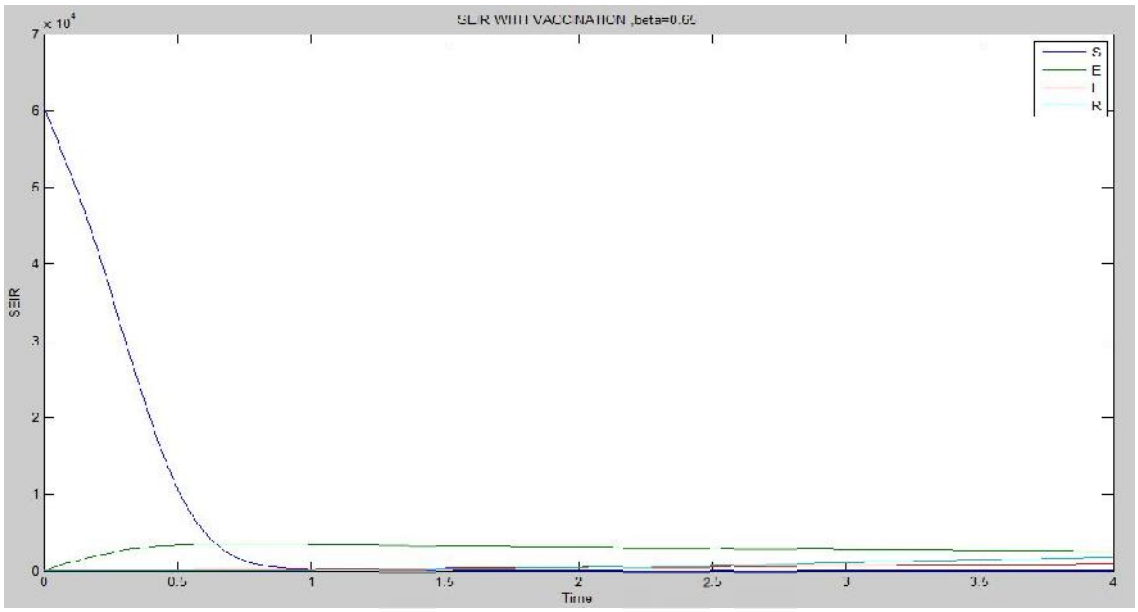


Figure 1.0: Shows a graph of $\beta = 0.65$ keeping $\kappa, \beta$ and $\gamma$ constant at equilibrium

We observed that as the recovery rate $(\gamma)$ varies from 0.07 to 0.99, the susceptible population decreases with no significant increase or decrease in the exposed population. While the infective and the recovered population decreases asymptotically to the time axis as time increases.

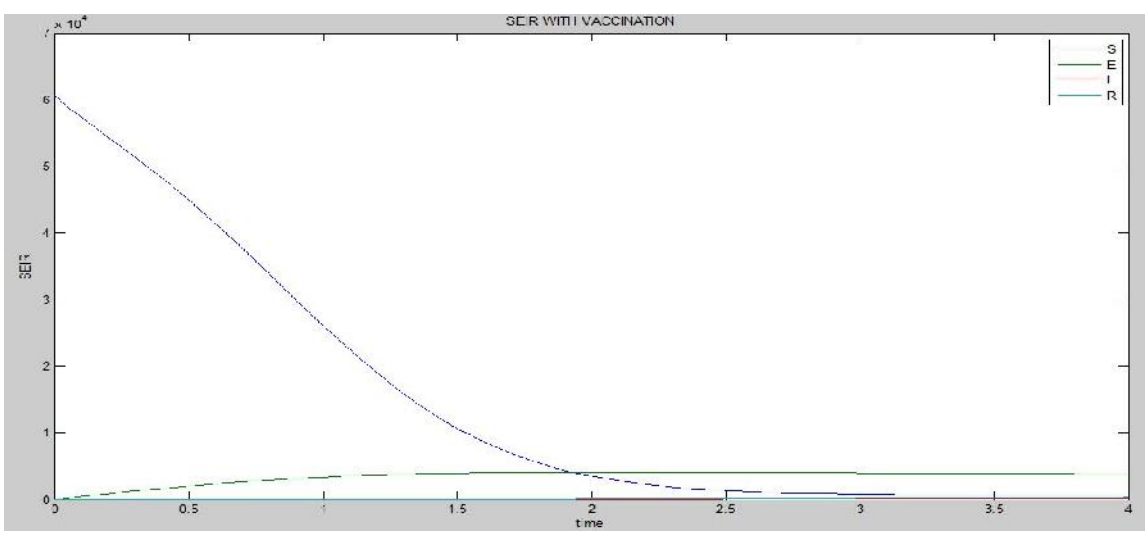

UNDER PEER REVIEW

Figure 2: Shows a graph of $\gamma = 0.99$ keeping $\theta$ ,$\beta$ and $\kappa$ constant at equilibrium

We observed that as the latency rate $(\kappa)$ increases from 0.05 to 0.75 there is a sharp decrease in the susceptible population from approximately 60,000 to 100 within the 4 years with more chickenpox patients recovering from approximately 2 to 400 and a small increase in the infective population from approximately 2 to 150 with a decline in the exposed population from approximately 300 and asymptotically to the time axis as time increases.

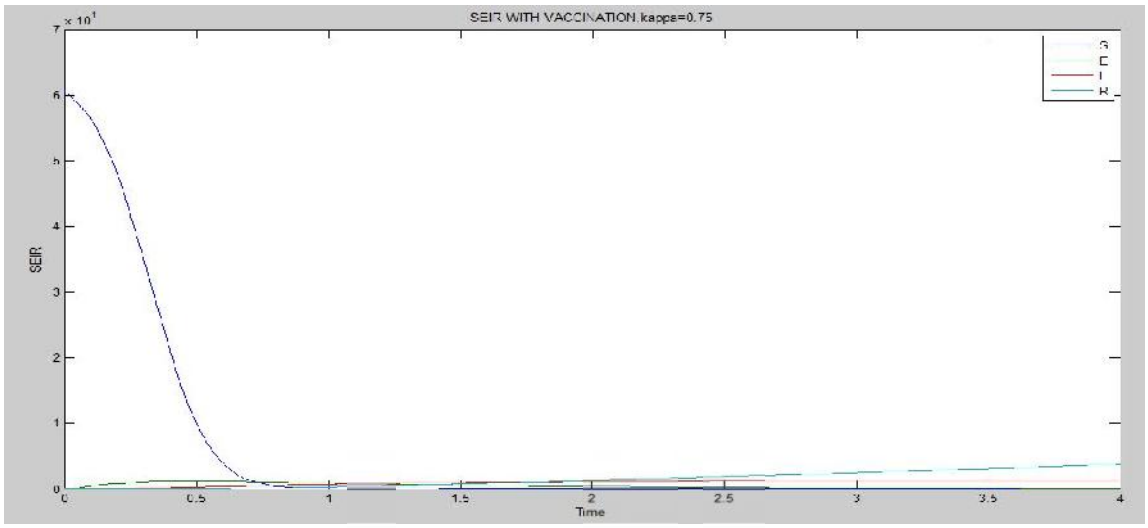


Figure 2: Shows a graph of $\kappa = 0.75$ keeping $\theta$ ,$\beta$ and $\gamma$ constant at equilibrium

As the vaccination rate coefficient $(\theta)$ varies from 0.02 to 0.96, we observed that more chickenpox patients recovered from approximately 200 to 30,000 with a decrease in the exposed population from approximately 300 to 250 with no significant increase or decrease in the infective as time increases.

UNDER PEER REVIEW

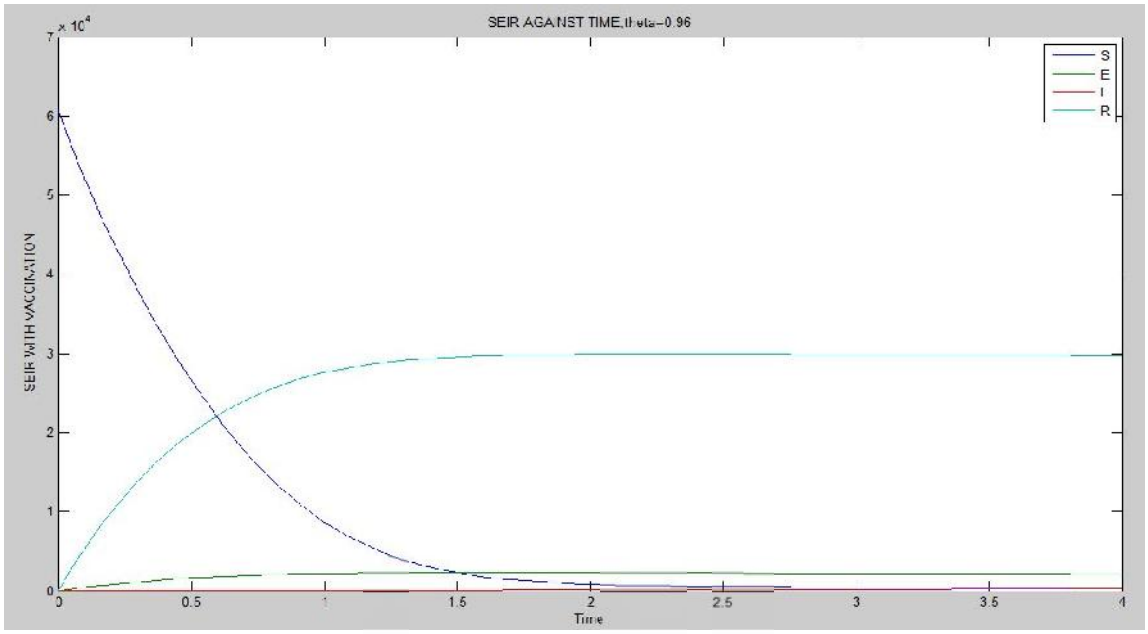


Figure 2: Shows a graph of $\theta = 0.96$ keeping $\kappa, \beta$ and $\gamma$ constant at equilibrium

From the sensitivity analysis from the studies, We observed that vaccination rate coefficient $(\theta)$ was more sensitive to the model than the transmission rate $(\beta)$ , latency rate $(\kappa)$ and the recovering rate $(\gamma)$.

**Conclusion**

From the studies, we observed that if vaccination rate coefficient $(\theta)$ is increase (more people are vaccinated against chickenpox), chickenpox will be under control in the Municipality. We estimated that 53,241 out of 115,358 people needs to be vaccinated against the chickenpox and this corresponds to 46.2% of the people in the Municipality

UNDER PEER REVIEW

**Recommendations**

We call on all stakeholders in the health sector to come together to ensure that there is a law that enforces all the health sector to keep up to date on all the diseases reported at the various hospitals, clinics and the health centers due to the difficulties in obtaining data for research.

We recommend further studies on

(1) SEIR model using non constant population and incorporation of age.

(2) Researchers and students can extend the model to non constant population size and to unequal birth/death rate

**Reference**

[1] Anderson R. M and May R. M. (1991).Infectious Diseases in Human: Dynamics and control, Oxford University Press. Oxford.

[2] Esson A. B. (2013). Epidemiology of Chickenpox in Agona West Municipality, Ghana. MPhil Thesis, Department of Mathematics, Kwame Nkrumah University of Science and Technology, Kumasi, Ghana

[3] Heffernan J. M, Smith., R. S and Wahl L. M. (2005). Perspectives on the basic reproductive ratio . J. R. Soc. Interface 22, vol. 2 no. 4 281-293.

[4] Leslie Young (2009). Components of Chickenpox Vaccine

[5] Morbidity and Mortality Weekly Report MMWR (2006). 57(RR-5): 1-30 available on http:www.cdc.gov/MMWR/preview/MMWR htm/mm5508a5.htm (accessed on 31st December, 20012)

UNDER PEER REVIEW

[6] National Centre for Immunization Research and Surveillance (NCIRS) Fact Sheet (2009): Varicella-zoster (Chickenpox) Vaccines for Australian Children. Available on http: www.ncirs.edu.au (accessed on 12th December, 2012)

[7] Nardone A, De Oryb F, Carton., M, Cohen. D, Van Damme P, et al. (2007). The comparative seroepidemiology of varicella zoster virus in 11 countries in the European region. Vaccine 25(45): 7866–7872. [PubMed]

[8] Van Den Driessche P and Watemough J. (2002). Reproduction number and sub-threshold endemic equilibria for compartmental models. Math Biosci, 180, 29 - 48

[9] Dontwi, K. and Obeng-Denteh, W. (2011): *Using Differential Equations To Model The Number Of Bats In A Habitat,* Continental J. Applied Sciences 6 (2): 29 – 33

[10] Obeng-Denteh, W. (2011): *Modelling Students' Affinity For Pure Mathematics Using Differential Equations: The Case Of Students Of Kwame Nkrumah University Of Science And Technology*, Continental J. Applied Sciences 6 (2): 34 – 40

[11] Obeng-Denteh,W., Kodua-Nana,O., Owusu Ansah, S., Kwame Ansah,R., Quashie Nyamadu, A. (2012) *Modelling Students' Affinity For Lecture Attendance Using Differential Equations: The Case of Students Of Kwame Nkrumah University Of Science And Technology*, British Journal of Education, Society and Behavioural Science, 2 (4): 389 - 401

[12] Dontwi, I.K., Obeng-Denteh, W., Bilson Darku, F., Tackie-Otoo, F., Batsa Tetteh, F., Ewoenam,. K., Owusus-Mensah, I., Amoah-Mensah, J. (2013) Modeling Memorization and Forgetfulness Using Differential Equations, Progress in Applied Mathematics, 5 (2): 1-12

UNDER PEER REVIEW

[13] Dontwi, I. K.. Obeng-Denteh, W**.,** Andam, E. A., Obiri-Apraku, L. (2014) A Mathematical Model to Predict the Prevalence and Transmission Dynamics of Tuberculosis in Amansie West District, Ghana, British Journal of Mathematics and Computer Science, (In Press)