MODELLING HEPATITIS B IN A HIGH PREVALENCE DISTRICT IN GHANA

I. K. Dontwi[1], W. Obeng-Denteh[1], L. Obiri-Apraku[1], E. A. Andam[1]

[1]Department of Mathematics, Kwame Nkrumah University of Science and Technology, Kumasi, Ghana,

ABSTRACT

We use the SIR modelKermack and Mckendrickand for hepatitis B with vaccination. The main goal is to use existing clinical hepatitis B data from the biostatistics Department of the Tano North district health directorate to formulate a mathematical model to understand the dynamics in the Tano North District and assist decision makers to formulate the best ideas to prevent, control and eradicate the disease. Analyses is made of the existence and stability of the disease free and endemic equilibria. It is proven that the disease free equilibrium is locally asymptotically stable if the basic reproductive ratio, $R_0 < 1$ and when $R_0 > 1$ we have the endemic equilibrium. MATLAB was used for the programming and simulations.

Keywords: control of disease spread, differential equations, hepatitis B, prevention, eradication of disease

INTRODUCTION

Hepatitis, inflammation of the liver is caused by viruses, bacterial infections, or continuous exposure to alcohol, drugs, or toxic chemicals, such as those found in aerosol sprays and paint thinners [1]. Inflammation is the painful, red swelling that result when tissues of the body become injured or infected[2]. In clinical sciences, hepatitis is divided into three categories, namely, acute hepatitis, chronic hepatitis and fulminant hepatitis.Inflammation can cause organs to not work properly. Hepatitis can also result from an autoimmune disorder, in which the body mistakenly sends disease-fighting cells to attack its own healthy tissue, in this case the liver[3].The most common of all of Hepatitis is Cirrhosis. No matter what its cause, hepatitis reduces the liver's ability to perform life-preserving functions [4]. The other important function of liver is producing critical hormones.

When doctors speak of viral hepatitis, they usually are referring to hepatitis caused by a few specific viruses that primarily attack the liver. There are several hepatitis viruses; they have been named types A, B, C, D, E, F even though not confirmed, and G [5]. As our knowledge of hepatitis viruses grows, it is likely that this alphabetical list will become longer[6]. The most common hepatitis viruses are types A, B, and C[7].

Hepatitis B is a potentially life-threatening liver infection caused by the hepatitis B virus (HBV)[4]. It is a major global health problem but hepatitis C and hepatitis B (with HDV) are the most serious types of viral hepatitis in the world [8, 30]

30-. [8]. Originally known as "serum hepatitis", the disease has caused epidemics in parts of Asia and Africa, and it is endemic in China [2]. About a third of the world population has been

infected at one point in their lives, including 350 million who are chronic carriers which causes 620,000 deaths worldwide each year [9,10].However this was a new modified analysis.

Hepatitis B virus is transmitted between people by direct blood-to-blood contact or semen and vaginal fluid of an infected person[11]. Modes of transmission are the same as those for the human immunodeficiency virus (HIV), but the hepatitis B virus is 50 to 100 times more infectious[12]. Unlike HIV, the hepatitis B virus can survive outside the body for at least seven days. During this time, the virus can still cause infection if it enters the body of a person who is not protected by the vaccine [13].

The hepatitis B vaccine contains a protein (antigen) that stimulates the body to make protective antibodies. Examples of hepatitis B vaccines available include hepatitis B vaccine-injection (Engerix-B, Recombivax-HB). Three doses which aregiven at 0, 1, and 6 months of age, are necessary to assure protection [4].Hepatitis B vaccines are effective and safe. Up to 95% of vaccinated individuals form effective antibodies when they get the vaccine and are protected from hepatitis B [10, 14].

We seek to model the transmission of a disease through a population. Such modeling is very important to the study of epidemiology and the practice of medicine, since examining the relative effect of factors that govern the spread of a disease can help communities and health workers better prepare for and combat an outbreak.

A detailed understanding of the transmission of the hepatitis B virus and other emerging pathogens is crucial in its containment. Mathematical models can give insight into potential impact interventions. The complex interaction of different infection control strategies and their likely impact on transmission can be predicted using mathematical models.

In the natural history of HBV infection it is estimated that 10% to 33% of those who develop persistent infection end up with chronic hepatitis of which 20% to 50% may develop liver cirrhosis [15]. Hepatitis B is considered an important public health problem necessitating high priority strategies for prevention and control[14]. An estimated worldwide carrier of hepatitis B virus is 350 million, with an estimated 50 million chronic carriers of HBV in Africa[16]. In sub-Saharan Africa, carrier rates range from 9% to 20% [17]. HBV is endemic in Ghana with sero-prevalence rates ranging from 6.7% to 10% in blood donors, 6.4% in pregnant women and 15.6% in children among the general population. In jaundiced patients the rate is 54.1% [18].

The purpose of this study is to investigate the sero-prevalence of HBV infections among patients in the Tano north district. In a report by the district health directorate this year it was noted that there has been a considerable increase in the number of cases since 2009 to date. For instance the incidence has increased by 22% from 2010 to 2011. Therefore measures must be put in place to reduce the incidence of the disease.The district has put in place policies to eradicate hepatitis B, we seek to know how effective those policies are. There is also a vaccination program initiated by the district, we investigate if the programme is helping and the number of people they have to vaccinate to put the disease under control.

The purpose of this paper is to predict the spread of the hepatitis B disease in the Tano North district using differential equations, to do mathematical analysis of the model and to interpret the results of the model and by carrying out sensitivity analysis of the basic reproduction number on

various parameters. Some optimal strategies to control HBV infection in the Tano North District will be suggested.

The Tano North District is one of the Twenty-two (22) Administrative Districts of Brong-Ahafo Region of Ghana. It shares boundaries with Offinso and Ahafo-Ano Districts both in Ashanti Region in the North-East and South-West respectively. Other Districts that share boundaries with the Tano North include Tano South in the South, Asutifi in the West and Sunyani Municipal in the North. The District lies between longitude 7° 00' 25', latitude 1° 45' W and 2° 15' W with a total land area of 876sq kilometers, constituting about 1.8% of the total land area of the Brong-Ahafo Region.

The Tano North District has a total population of 78,415 comprising 39,338 males and 39,077 females as at 2010. The district has population growth rate of 2.4%.

MATHEMATICAL MODELING

In the last two decades, mathematical models have been used frequently to study the transmission dynamics of HBV in various regions. Reference[5]used a simple deterministic, compartmental mathematical model to illustrate the effects of carriers on the transmission of HBV.Reference [5]and [19]described models of the sexual transmission of HBV, which include heterogeneous mixing with respect to age and sexual activity. Reference [4] illustrated the relation between the age at infection with HBV and the development of the carrier state. Reference [20] gave a model to show that the prevalence of infection is largely determined by a feedback mechanism that relates the rate of transmission, average age at infection and age-related probability of developing carriage following infection. Reference [12] applied the model

of [20]to predict chronic hepatitis B infection in New Zealand. The prevalence of HBV in developing countries is different from that in developed countries, since it appears that the rate of transmission in childhood is the major determinant of the level of HBV endemicity[21], and little is known on the rates and patterns of sexual contact in developing countries. References [22]and [23]studied models of HBV transmission on developing countries and [19]described a model of HBV in the UK.

We propose a mathematical model to understand the trans-mission dynamics and prevalence of HBV in the Tano North district. The model is constructed based on the characteristics of HBV transmission in the Tano North district and the model of [24].The immunity after vaccination is lifetime[25]. Therefore, we divide the host population into three epidemiological groups: the proportion susceptible to infection S; those infected I; removed and with protective immunityR. Fig. 1 illustrates the three compartments and model variables.

MATERIALS AND METHOD

Data was collected from all the nine health facilities in the district and complied by the district statistician. Data on the population and the population growth rate were obtained from the Regional Statistical Service, BrongAhafo Region.Below is the data as obtained from the Tano District which shows trend of Hepatitis BCases in Tano North District.

YEAR	**NUMBER OF CASES**
2000	25
2001	32
2002	38

2003	30
2004	32
2005	35
2006	40
2007	49
2008	22
2009	36
2010	54
2011	85
TOTAL	**478**

Table 1 Shows trend of Hepatitis BCases in Tano North District

The following were our values and parameter estimations;

- TOTAL POPULATION (N)= 74775
- INITIAL NUMBER OF INFECTED INDIVIDUALS (I_0)= 25
- INITIAL NUMBER OF SUSCEPTIBLE INDIVIDUALS (S_0)= 73475
- FINAL NUMBER OF SUSCEPTIBLE INDIVIDUALS (S_∞)=71246
- RECOVERY RATE (β)=0.984155
- INFECTIOUS RATE (α)=1.0058

- RELATIVE REMOVAL RATE (ρ)=0.97848
- DEATH RATE (μ)=0.0094
- VACCINATED SUSCEPTIBLE (P)=0.017051

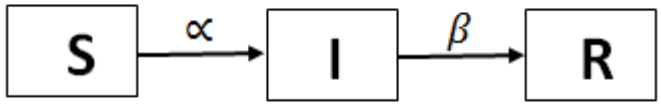

Figure 1. Flow chat of HBV transmission of a population

Where $\alpha is$the transmission rate coefficient and β is the removed rate coefficient.

The model is given by three ordinary differential equations:

$$\frac{dS}{dt} = -\alpha SI (1)$$

$$\frac{dI}{dt} = \alpha SI - \beta I \qquad (2)$$

$$\frac{dR}{dt} = \beta I \qquad (3)$$

With initial conditions$S(0) = S_0 > 0, I(0) = I_0 > 0, R(0) \geq 0$.

These are modified by introducing the vaccinated susceptible individuals in the population. Those who receive the vaccine gain a life time immunity [26].Figure 2 illustrates the variations.

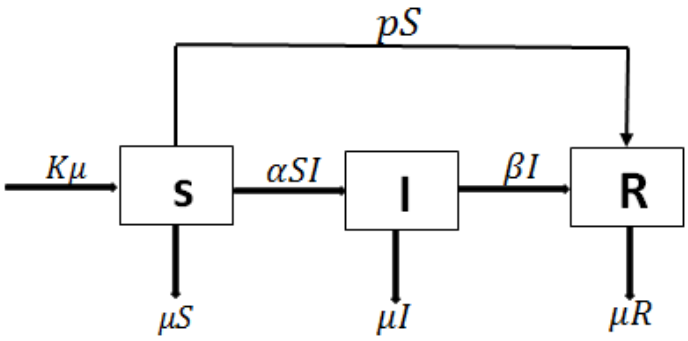

Figure 2. Flow chat of HBV transmission with vaccination in a population

Where;

$K\mu$= birth rate of the population

pS= vaccinated susceptible

μ= natural death rate

α= infection rate

β=recovery rate

$$\frac{dS}{dt} = \mu K - \alpha SI - \mu S - pS \qquad (4)$$

$$\frac{dI}{dt} = \alpha SI - (\beta + \mu)I \qquad (5)$$

$$\frac{dR}{dt} = \beta I - \mu R + pS \qquad (6)$$

The reproductive ratio R_O of hepatitis B with vaccination can be calculated from equations (4), (5) and (6) as follows;

The Jacobian matrix for the equations will be written as;

$$J(S, I, R) = \begin{bmatrix} -\alpha I - \mu - p & -\alpha S & 0 \\ \alpha I & \alpha S - \beta - \mu & 0 \\ p & \beta & -\mu \end{bmatrix}$$

The first two equations (4) and (5) do not depend on R. Thus, we need to consider the system of equations

$$\mu K - \alpha SI - \mu S - pS = 0$$

$$\alpha SI - \beta I - \mu I = 0$$

Therefore the Jacobian matrix becomes

$$J(S,I) = \begin{bmatrix} -\alpha I - \mu - p & -\alpha S \\ \alpha I & \alpha S - \beta - \mu \end{bmatrix}$$

In order to determine the stability of the systems (4) and (5), we substitute $I = 0$ into the linearized Jacobian matrix to find the eigenvalues as follows

$$J(S,0) = \begin{bmatrix} -\mu - p & -\alpha S \\ 0 & \alpha S - \beta - \mu \end{bmatrix}$$

$$Det(J - \lambda) = \begin{vmatrix} -\mu - p - \lambda & -\alpha S \\ 0 & \alpha S - \beta - \mu - \lambda \end{vmatrix}$$

$$Det(J - \lambda) = 0$$

$$(-\mu - p - \lambda)(\alpha S - \beta - \mu - \lambda) = 0$$

$$-\mu - p - \lambda = 0$$

$$\lambda_1 = -\mu - p$$

Also

$$[(\alpha S - \beta - \mu) - \lambda] = 0$$

$$-\lambda = -(\alpha S - \beta - \mu)$$

$$\lambda_2 = \alpha S - \beta - \mu$$

The parameter ranges are as follows,$0 < \mu < 1, 0 < p < 1, 0 < \beta < 1\ and\ 0 < \alpha < 1. \lambda_2$ depends onα, β, Sandμ. Although, the first term αS is positive, the second and third terms are negative. This implies that the sign of λ_2 depends onαS, but $0 < \alpha < 1$. If S becomes large, λ_2 will be positive and if S becomes small, α will make the value of the first term small, thereby

making the value of λ_2 negative. Therefore $\alpha S \ll \beta$ and λ_2 is negative. Also $p \gg \beta$ and that makes λ_2 the most negative.

Therefore λ_2 is the dominant eigenvalue, since it is the most negative eigenvalue.

$$R_O = \lambda^* \times (infectiousperiod) + 1$$

We now consider the initial condition $S = S_O$

$$R_O = \left(\frac{\alpha S_O - \beta - \mu}{1}\right) \times \frac{1}{(\mu + \beta)} + 1$$

$$R_O = \frac{\alpha S_O - \beta - \mu}{(\mu + \beta)} + 1$$

$$R_O = \frac{\alpha S_O - \beta - \mu + \mu + \beta}{(\mu + \beta)}$$

$$R_O = \frac{\alpha S_O}{(\mu + \beta)} \qquad (7)$$

This is the average number of secondary infections caused by one infected individual during the mean course of infection in the case where the number of susceptible is counted from the disease free equilibrium; that is the total susceptible of the population when disease is free[27]. When $R_O > 1$ there is an endemic and the solution is unstable but when $R_O < 1$ a positive equilibrium occurs and the solution is stable[10].

EQUILIBRIUM POINTS

In other to determine the stability of the model we first evaluate the equilibrium points or steady states of the system of the ordinary differential equations (4), (5), and (6). The points to be found

are disease-free (where I=0), and endemic ($I \neq 0$). We set the right-hand side of the equations in the system (4), (5) and (6) to zero and then solve for the values of S, I, and R as follows:

At the steady state,

$$\frac{dS}{dt} = 0, \frac{dI}{dt} = 0 \; and \; \frac{dR}{dt} = 0$$

$$\mu K - \alpha SI - \mu S - pS = 0 \tag{8}$$

$$\alpha SI - \beta I - \mu I = 0 \tag{9}$$

$$\beta I - \mu R + pS = 0 \tag{10}$$

From equation (9) above

$$(\alpha S - \beta - \mu)I = 0$$

$$I = 0 \; and \alpha S - \beta - \mu = 0$$

$$\therefore S = \frac{\beta + \mu}{\alpha} \tag{11}$$

From equation (8)

$$\mu K = \alpha SI + \mu S + pS$$

$$\mu K = (\alpha I + \mu + p)S$$

$$\frac{\mu K}{S} = \alpha I + \mu + p$$

$$\frac{\mu K}{S} - \mu - p = \alpha I$$

$$\frac{\mu K}{S} - (\mu + p) = \alpha I$$

$$I = \frac{\mu K}{\alpha S} - \frac{(\mu + p)}{\alpha}$$

But from equation (11) $S = \frac{\beta+\mu}{\alpha}$

$$I = \frac{\mu K}{\alpha(\frac{\beta+\mu}{\alpha})} - \frac{(\mu + p)}{\alpha}$$

$$I = \frac{\mu K}{\left(\frac{\alpha(\beta+\mu)}{\alpha}\right)} - \frac{(\mu + p)}{\alpha}$$

$$I = \frac{\alpha\mu K}{\alpha(\beta + \mu)} - \frac{(\mu + p)}{\alpha}$$

$$I = \frac{\alpha\mu K - (\beta + \mu)(\mu + p)}{\alpha(\beta + \mu)} \qquad (12)$$

From equation (10)

$$\beta I - \mu R + pS = 0$$

$$\mu R = \beta I + pS$$

$$R = \frac{\beta I + pS}{\mu} \qquad v \qquad (13)$$

Substituting equations (11) and (12) into equation (13)

$$R = \frac{\beta\left[\frac{\alpha\mu K-(\beta+\mu)(\mu+p)}{\alpha(\beta+\mu)}\right] + p\left(\frac{\beta+\mu}{\alpha}\right)}{\mu}$$

$$R = \frac{\beta[\alpha\mu K - (\beta + \mu)(\mu + p)] + p(\beta + \mu)(\beta + \mu)}{\mu\alpha(\beta + \mu)}$$

$$R = \frac{\beta\alpha\mu K - \beta(\beta+\mu)(\mu+p) + p(\beta+\mu)(\beta+\mu)}{\mu\alpha(\beta+\mu)}$$

$$R = \frac{\beta\alpha\mu K + (\beta+\mu)[-\beta(\mu+p) + p(\beta+\mu)]}{\mu\alpha(\beta+\mu)}$$

$$R = \frac{\beta\alpha\mu K + (\beta+\mu)[-\beta\mu - \beta p + p\beta + P\mu]}{\mu\alpha(\beta+\mu)}$$

$$R = \frac{\beta\alpha\mu K + (\beta+\mu)[-\beta\mu + P\mu]}{\mu\alpha(\beta+\mu)}$$

$$R = \frac{\beta\alpha\mu K + (\beta+\mu)(\beta-P)(-\mu)}{\mu\alpha(\beta+\mu)}$$

$$R = \frac{\mu[\beta\alpha K - (\beta+\mu)(\beta-P)]}{\mu\alpha(\beta+\mu)}$$

$$R = \frac{\beta\alpha K - (\beta+\mu)(\beta-P)}{\alpha(\beta+\mu)} \tag{14}$$

$$(S^*, I^*, R^*) = \left[\frac{\beta+\mu}{\alpha}, \frac{\alpha\mu K - (\beta+\mu)(\mu+p)}{\alpha(\beta+\mu)}, \frac{\beta\alpha K - (\beta+\mu)(\beta-P)}{\alpha(\beta+\mu)}\right] \tag{15}$$

Now when$I = 0$, equation (8)

$$\mu K - \alpha SI - \mu S - pS = 0$$

$$\mu K - \alpha S(0) - \mu S - pS = 0$$

$$\mu K - \mu S - pS = 0$$

$$\mu K = \mu S + pS$$

$$\mu K = S(\mu + p)$$

$$S = \frac{\mu K}{\mu + p} \tag{16}$$

Putting$I = 0$, into equation (10)

$$\beta I - \mu R + pS = 0$$

$$\beta(0) - \mu R + pS = 0$$

$$-\mu R + pS = 0$$

$$\mu R = pS$$

$$R = \frac{pS}{\mu} \tag{17}$$

Substituting equation (11) into equation (17)

$$R = \frac{p\left(\frac{\mu K}{\mu + p}\right)}{\mu}$$

$$R = \frac{p\mu K}{\mu(\mu + p)}$$

$$R = \frac{pK}{(\mu + p)} \tag{18}$$

At the disease free equilibrium

$$(S^*, I^*, R^*) = \left(\frac{\mu K}{\mu + p}, 0, \frac{pK}{(\mu + p)}\right)$$

Stability Analysis of Disease-Free Equilibrium Point

To determine the stability of the system of the disease-free equilibrium (S,I)=(1,0), we will consider the linearized system of the equations (4) and (5) below about the equilibrium point by taking the Jacobian.

$$\frac{dS}{dt} = \mu K - \alpha SI - \mu S - pS$$

$$\frac{dI}{dt} = \alpha SI - (\beta + \mu)I$$

The Jacobian is therefore given by

$$J(S,I) = \begin{bmatrix} -\alpha I - \mu - p & -\alpha S \\ \alpha I & \alpha S - \beta - \mu \end{bmatrix}$$

The Jacobian matrix becomes

$$J(S,0) = \begin{bmatrix} -\mu - p & -\alpha S \\ 0 & \alpha S - \beta - \mu \end{bmatrix}$$

Since S=1 and I=0 at the disease free equilibrium

$$Det(J - \lambda) = \begin{vmatrix} -\mu - p - \lambda & -\alpha S \\ 0 & \alpha S - \beta - \mu - \lambda \end{vmatrix} = 0$$

$$Det(J - \lambda) = 0$$

$$(-\mu - p - \lambda)(\alpha S - \beta - \mu - \lambda) = 0$$

$$\lambda_1 = -\mu - p and \lambda_2 = \alpha S - \beta - \mu$$

For $Det(J - \lambda)$ to be asymptotically stable, both eigenvalues must be negative. From

$Det(J - \lambda) = 0$, it is clear that $\lambda_1 = -\mu - p$ is negative and therefore if$\lambda_2 = \alpha S - \beta - \mu < 0$ then both eigenvalues are negative and$R_0 < 1$. Hence the disease free-equilibrium is asymptotically stable if $R_0 < 1$. On the other hand, if $\lambda_2 = \alpha S - \beta - \mu > 0$, then$Det(J - \lambda)$ is unstable.

RESULTS AND DISCUSSIONS

STABILITY ANALYSIS OF EQUILIBRIUM POINTS

$$(s^*, I^*) = \left(\frac{\beta + \mu}{\alpha}, 0\right)$$

Substituting $\alpha = 1.00588, \mu = 0.0094, \beta = 0.984155$ into (s^*, I^*) gives

$$(s^*, I^*) = \left(\frac{0.984155 + 0.0094}{1.0058}, 0\right)$$

$$(s^*, I^*) = (0.987826,0)$$

Substituting this into the Jacobian matrix below gives

$$Det(J - \lambda) = \begin{vmatrix} -\mu - p - \lambda & -\alpha S \\ 0 & \alpha S - \beta - \mu - \lambda \end{vmatrix} = 0$$

$$Det(J - \lambda) = \begin{vmatrix} -0.0094 - 0.017051 - \lambda & -1.0058(0.982615) \\ 0 & 1.0058(0.982615) - 0.984155 - 0.0094 - \lambda \end{vmatrix}$$

$$= 0$$

$$Det(J - \lambda) = \begin{vmatrix} -0.026451 - \lambda & -0.988314 \\ 0 & 3.908 \times 10^{-7} - \lambda \end{vmatrix} = 0$$

$$(-0.026451 - \lambda)(3.908 \times 10^{-7} - \lambda) = 0$$

$$-1.03371 \times 10^{-8} + 0.026451\lambda - 3.908 \times 10^{-7}\lambda + \lambda^2 = 0$$

$$\lambda^2 + 0.026451\lambda - 1.03371 \times 10^{-8} = 0$$

$$\lambda_1 = -0.026451 \; and \lambda_2 = 3.90796 \times 10^{-7}$$

This is a saddled point, since $\lambda_1 and \lambda_2$ have distinct eigenvalues. The equilibrium point $(s^*, I^*) = (0.987826,0)$ is therefore unstable. This is so because the transmission rate of HBV in the Tano North District is greater than the recovery rate of the disease in the district.

Substituting $\alpha = 1.00588, \mu = 0.0294, \beta = 0.984155 \; and S_0 = \; 0.983283 \; into R_0$ gives

$$R_0 = \frac{1.0058 \times 0.982615}{(0.0094 + 0.984155)} = 0.994725$$

$$R_0 = 0.994725 < 1$$

Therefore with vaccination a positive equilibrium occurs and the solution is stable. When there is an epidemic outbreak in a certain part of a country, a vaccination programme is considered; this can be expensive. Because of that, there is the need to decide how many people to be vaccinated in order to control and contain the epidemic. In the same way, the required number of people that needs to be vaccinated in the Tano North District can be estimated as follows;

$$H_1 = \frac{R_0 - 1}{R_0} = \frac{1.00423 - 1}{1.00423} = 0.004212$$

Where $H_1$is the herd immunity threshold.That is about 0.42% of the susceptible population should be immuned in order to bring the spread of hepatitis B under total control in the Tano north district.

Research has shown that that the vaccine for HBV has 95% effectiveness[4, 22, 28]. Knowing the efficacy of the vaccine we estimate the proportion of the population that need to be vaccinated.

This is given by

$$p > \frac{1 - \left(\frac{1}{1.00423}\right)}{0.95} = 0.004434$$

It canbe observed from calculation above that when the effectiveness is 95%, then about 0.44% of the population need to be vaccinated in order for $C_v < 1$. Where C_v is the Control Vaccination Number which is the average number of secondary cases generated by an infectious

case during epidemic with control measure, in this case vaccination. The formula for estimating the control vaccination number is given by

$$C_v = R_0(1 - hp)$$

Where$h$ is the vaccine efficacy (the effectiveness of the vaccine) and p is the vaccination coverage (the fraction of the population that has been vaccinated). The goal of researchers is to work around $C_v < 1$ [14].

We proceed by doing the Sensitivity Analysis of R_0 of Hepatitis B without Vaccination

a. If $\boldsymbol{\alpha and \beta}$ values are increased and S_0 remains the same, that is 2.0058 and 0.999155 respectively, then

$$\boldsymbol{R_0} = \frac{\alpha S_0}{\beta} = \frac{2.0058(0.982615)}{0.999155} = 1.9726 > 1$$

That is to say, keeping the number of susceptible individuals in Tano North district constant any value of $\alpha and \beta$ greater than the values used in this paper (thus $\alpha = 1.0058\ and \beta = 0.984155$) will make R_0 greater than 1.

b. If $\alpha and \beta$ values are reduced to $\alpha = 0.0058\ and \beta = 0.884155$ but S_0 maintained at 0.982615, then

$$R_0 = \frac{\alpha S_0}{\beta} = \frac{0.0058(0.982615)}{0.884155} = 0.006446 < 1$$

That is to say, reducing the values of $\alpha and \beta$and maintaining the number of susceptible will make$R_0 < 1$.

Sensitivity Analysis of R_0 of Hepatitis B with Vaccination is also as follows;

a. If $\boldsymbol{\alpha and \beta}$ values are increased and S_0 remains the same, that is 2.0058 and 0.999155 respectively.

$$\boldsymbol{R_0} = \frac{\alpha S_0}{(\mu + \beta)} = \frac{2.0058(0.982615)}{(0.0094 + 0.999155)} = 1.95421 > 1$$

When the values of $\boldsymbol{\alpha and \beta}$are increased above$\alpha = 1.0058\ and \beta = 0.984155$, R_0 remains greater than 1 as required.

b. If $\alpha and \beta$ values are reduced to $\alpha = 0.0058\ and \beta = 0.884155$ but S_0 maintained at 0.982615.

$$\boldsymbol{R_0} = \frac{\alpha S_0}{(\mu + \beta)} = \frac{0.0058(0.982615)}{(0.0094 + 0.884155)} = 0.006378 < 1$$

When the values of $\boldsymbol{\alpha and \beta}$are reduced below $\alpha = 1.0058\ and$

$\beta = 0.984155$the value of R_0 will be less than 1.

The simulation was carried out using Matlab R2012a (7.14.0.739). The values of S, I and R, are altered and the changes that occur in model are observed.

Sensitivity Analysis of Hepatitis B Transmission without Vaccination by Simulation.

Assuming the number of susceptible in the population is 5000 and there is no vaccinated individual meaning no removed individuals, we introduce one infective into our system. The simulation gives us these graphs.

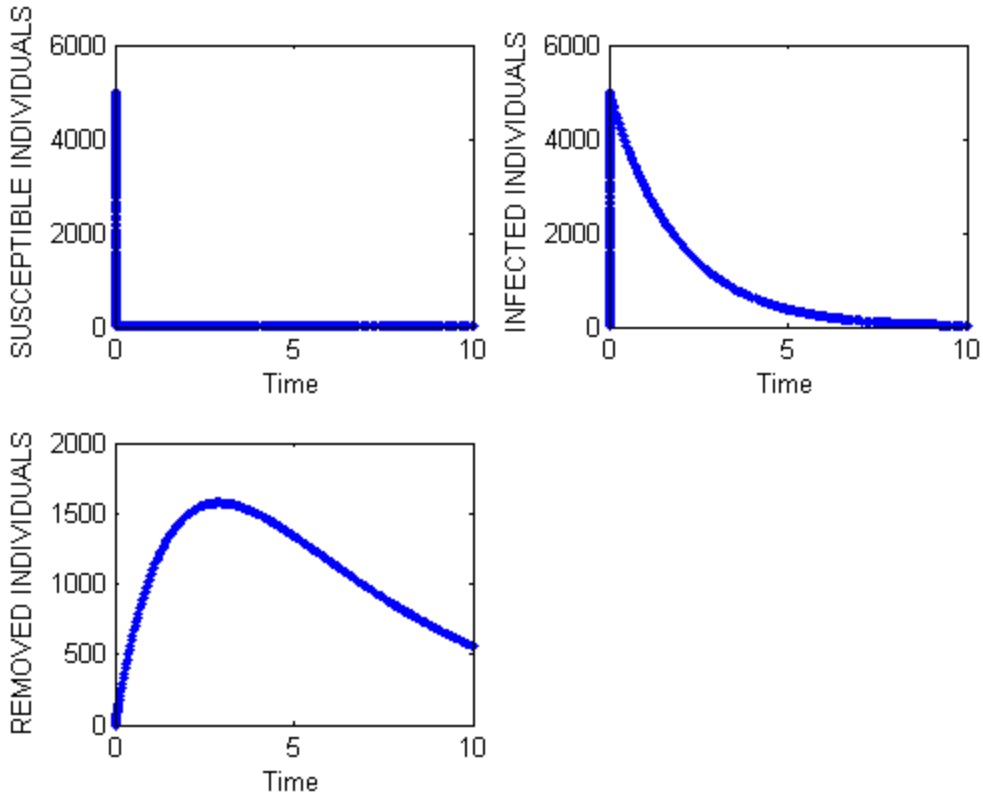

Figure 3.S=5000, I=1 and R=0.

It would be observed that by a short period, the number susceptible would have decreased to zero. This is because of the negative sign in the model. Since a constant population was assumed, the number susceptible decreases to zero.

The number of infected individuals increases gradually till it reaches its peak value.

The removed individuals increase gradually that is due to deaths by infected individuals moving from the infected compartment to the removed compartment.

Sensitivity Analysis of Hepatitis B Transmission with Vaccination by Simulation.

Assuming the number susceptible in our population is 5000, no infected individuals and no removed persons. The simulation gives these graphs;

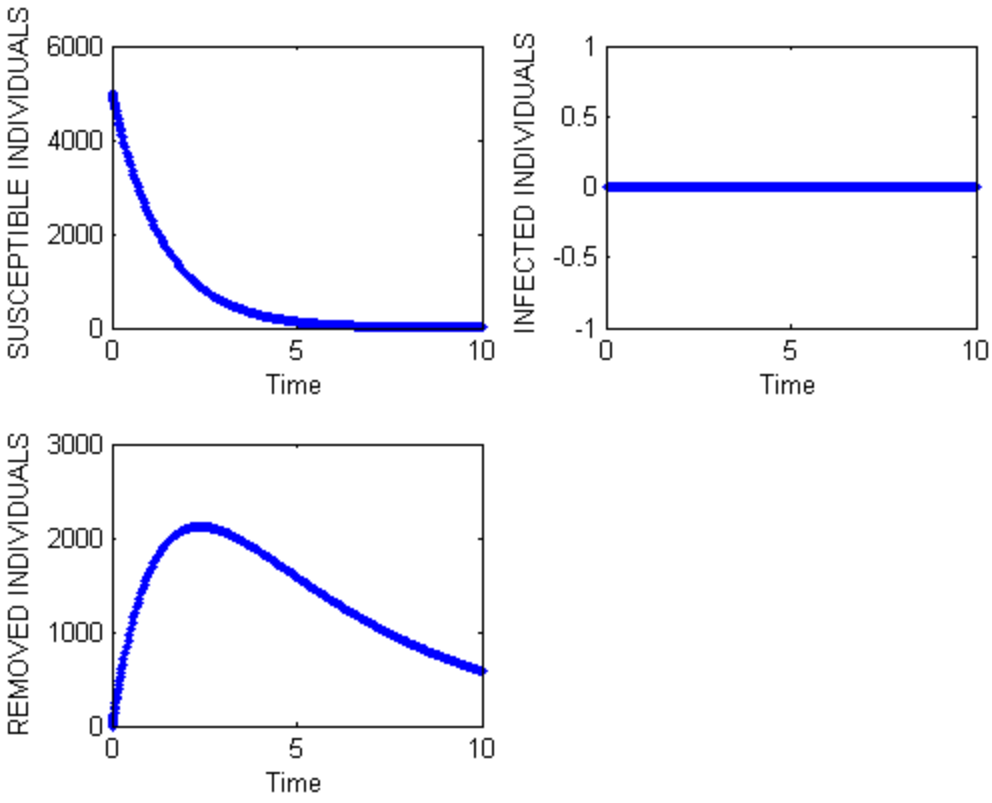

Figure 4. S=5000, I=0 and R=0

It would be observed that the number susceptible decrease in a short time and moved to the removed compartment due to vaccination.

Since there was no infected individual in the population, the number remains a constant at zero.

The number of removed individuals also gradually moves up as a result of vaccination of the susceptible. Those vaccinated move to the removed compartment straight. It will be observed that the graph beganto move down with time, which is due to natural death.

The number of susceptible was reduced to 4999 and the number of removed individuals still at zero, we introduce one infective into our system. The simulation gives these graphs.

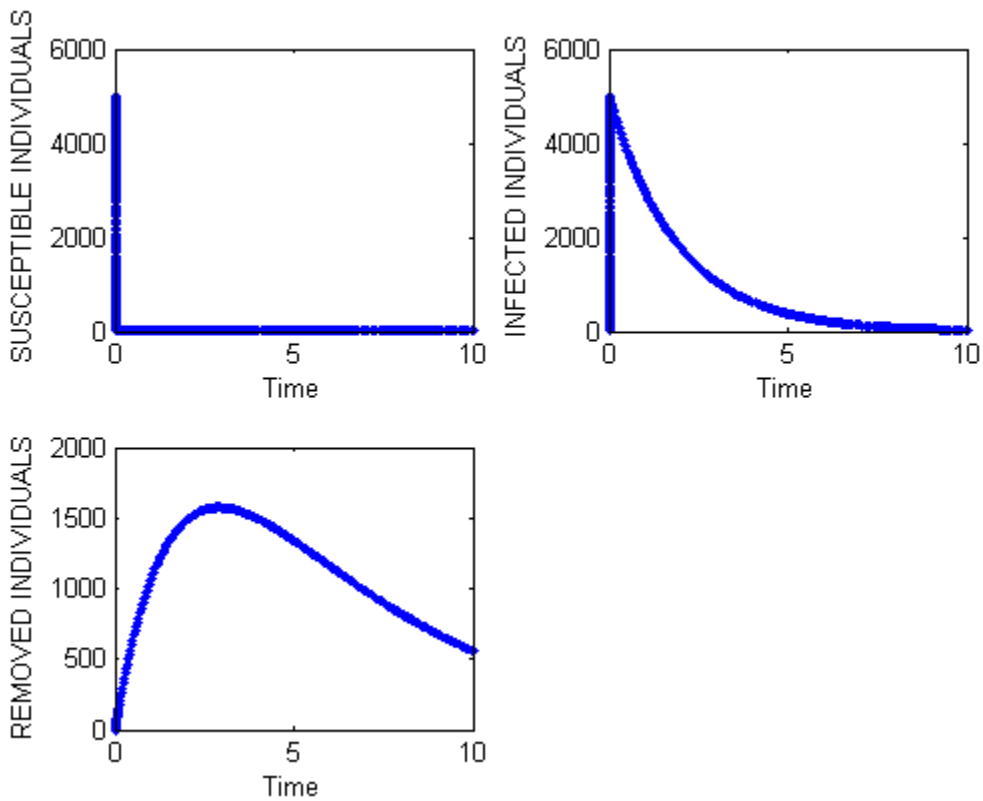

Figure 5. S=4999, I=1 and R=0

It would be observed that the number susceptible decrease in a short period. This is due to two reasons:

1. People who have not been vaccinated acquiring the disease and moving to the infected compartment.
2. The vaccinated moved to the removed compartment.

The infected graph moves up for some time and in a little while decreases, this is due to the proportion of susceptible that were infected moving into the infective compartment. But they die of the disease and hence the decrease in the graph.

The removed also increases due to vaccination of some portions of the number of susceptible. It will be further observed that the disease is stabilized after some time.

CONCLUSION

The increasing use of the hepatitis B vaccine is having significant impact on the rate of HBV transmission and related deaths in the Tano North district. An increase in the hepatitis B vaccination coverage rate in the district will further decrease the prevalence of hepatitis B in the district. Maintaining it will result in increase in the rate of transmission of hepatitis B in the Tano North district which will affect the development of human resource in the district and country at large.

The sensitivity analysis indicated that there exist a direct relationship between the transmission rate, and the reproductive ratio, R_0. The higher the transmission rate relative to the recovery rate the higher the reproductive number whilst the lower the transmission rate relative to the recovery rate the lower the reproductive number since the natural death rate is relatively small.

Perturbation analysis of disease free equilibrium is also important in scenarios as these [29]. Vaccinating these percentage of the entire population reduces the proportion of the susceptible population who risk infection upon outbreak. Numerical simulations and sensitivity analysis was extensively helpful in the determination of the effect of the various parameters especially the transmission rate and recovery rate on the spread of the disease. The simulation results and the sensitivity analysis of the study confirmed the transmission rate and recovery rate as the dominant parameters in the spread of the disease in the district.

ACKNOWLEDGEMENT

The authors acknowledge with appreciation the assistance offered by the Tano North District Directorate of Health Services for the data they provided on Hepatitis B. The authors are grateful to the entire staff. They also express their gratitude to unknown reviewers for theiruseful comments.

REFERENCES

1. Ganem, D., & Prince, A. M. (2004). Mechanics of disease: hepatitis B virus infection-natural history and clinical consequences. *New England Journal of Medicine*, **350**(11), 1118-1129.
2. Williams, R., 2006. Global challenges in liver disease. Hepatol. 44 (3), 521–526.

3. Barker LF, Shulman NR, Murray R, Hirschman RJ, Ratner F, Diefenbach WC, Geller HM (1996). "Transmission of serum hepatitis. 1970". Journal of the American Medical Association 276 (10): 841–844.doi:10.1001/jama.276.10.841.
4. Edmunds, W.J., Medley, G.F., Nokes, D.J., Hall, A.J., Whittle, H.C., 1993. The influence of age on the development of the hepatitis B carrier state. Proc. R. Soc. Lond. B 253, 197–201.

5. Anderson, R.M., May, R.M., Nokes, D.J., 1992. Preliminary analyses of the predicted impacts of various vaccination strategies on the transmission of hepatitis B virus. In: Bennet (Ed.), The Control of Hepatitis B: The Role of Prevention in Adolescence. Gower Medical Publishing, London, pp. 95–130.
6. Hahnea, S., Ramsaya, M., Balogun, K., Edmundsa, W.J., Mortimer, P., 2004. Incidence and routes of transmission of hepatitis B virus in England and Wales, 1995–2000: implications for immunisation policy. J. Clin. Virol. 29, 211–220.

7. Anderson, R.M., May, R.M., 1991. Infectious Disease of Humans: Dynamics and Control. Oxford University Press, Oxford.
8. Cui, F.Q., Wang, X.J., Liang, X.F., 2006. Epidemiological analysis on reported hepatitis B under 15 years in China: the report from Chinese Center for Disease Control and Prevention. Chin. J. Vaccines Immunization 12, 206–208.

9. WHO/ICO Information Centre on HPV and Cervical Cancer (HPV Information Centre). Human Papillomavirus and Related Cancers in Ghana.Summary Report 2010.

Available at www. who.int/ hpvcenter

10. Shepard, C.W., Simard, E.P., Finelli, L., Fiore, A.E., Bell, B.P., 2006. Hepatitis B virus infection: epidemiology and vaccination. Epidemiol. Rev. 28, 112–125.

11. Chang, M.H., (June 2007) Hepatitis Virus Infection, Semen Fetal Neonatal Med 12 (3): 160 - 167

12. Thornley, S., Bullen, C., Roberts, M., 2008. Hepatitis B in a high prevalence New Zealand population: a mathematical model applied to infection control policy. J. Theor. Biol. 254, 599–603.

13. Liu, G.-T., et al., 2002. Comments on the prevention and research of chronic hepatitis in China. Natl. Med. J. China 82, 74–76

14. Maynard, J.E., Kane, M.A., Hadler, S.C., 1989. Global control of hepatitis B through vaccination: role of hepatitis B vaccine in the expanded programme on immunization. Rev. Infect. Dis. 2 (suppl. 3), S574–S578.

15. World Health Organization. (2000). Hepatitis B fact sheet no. 204.Website only, available online at http://www.who.int/mediacentre/factssheets/fs204/cn/.

16. Lavanchy, D., 2004. Hepatitis B virus epidemiology, disease burden, treatment and current and emerging prevention and control measures. J. Viral. Hepat. 11, 97–107.

17. World Health Organization. (2004). Website only, available online at http://www.who.int/vaccines-diseases/history/history.shtml

18. Acheampong J. W.(1991). The prevalence of hepatitis B surface antigen among blood donors and jaundiced patients at KomfoAnokye Teaching Hospital Ghana Med J; 25: 313-317.

19. Williams, J.R., Nokes, D.J., Medley, G.F., Anderson, R.M., 1996. The transmission dynamics of hepatitis B in the UK: a mathematical model for evaluating costs and effectiveness of immunization programmes. Epidemiol. Infect. 116, 71–89.

20. Medley, G.F., Lindop, N.A., Edmunds, W.J., Nokes, D.J., 2001. Hepatitis-B virus endemicity: heterogeneity, catastrophic dynamics and control. Nat. Med. 7 (5), 619–624.

21. Edmunds, W.J., Medley, G.F., Nokes, D.J., Hall, A.J., Whittle, H.C., 1996. Epidemiological patterns of hepatitis B virus (HBV) in highly endemic areas. Epidemiol. Infect. 117, 313–325.

22. McLean, A.R., Blumberg, B.S., 1994. Modelling the impact of mass vaccination against hepaitits B. I. Model formulation and parameter estimation. Proc. R. Soc. Lond. B 256, 7–15.

23. Edmunds, W.J., Medley, G.F., Nokes, D.J., 1996a. The transmission dynamics and control of hepatitis B virus in the Gambia.Stat. Med. 15, 2215–2233.

24. Kermack, W. O. and McKendrick, A. G. (1927). Contributions to the mathematical theory of epidemics, part 1. Proceedings of the Royal Society of Edinburgh. Section A. Mathematics. 115 700-721.

25. Sun, Z.T., Ming, L.H., Zhu, X., Lu, J.H., 2002. Prevention and control of hepatitis B in China. J. Med. Virol. 67, 447–450.

26. Edmunds, W.J., Medley, G.F., Nokes, D.J., 1996b. Vaccination against hepatitis B virus in highly endemic area: waning vaccine-induced immunity and the need for booster doses. Trans. R. Soc. Trop. Med. Hyg. 90, 436–440.

27. Wang, X.J., Zhang, R.Z., Hu, Y.S., Liang, X.F., 2004. Analysis on epidemic status of viral hepatitis in China: the report from Chinese Center for Disease Control and Prevention. Dis. Surveillance 19, 290–292.

28. Zhao, S.-J., Xu, Z.-Y., Lu, Y., 2000. A mathematical model of hepatitis B virus transmission and its application for vaccination strategy in China. Int. J. Epidemiol. 29, 744–752.

29. Diekmann, O., Heesterbeek, J.A.P., Metz, J.A.J., (1990). On the definition and the computation of the basic reproduction ratio R_0 in models for infectious diseases in heterogeneous populations. J. Math. Biol. 28, 365–382.

30. **Rahimkhani.M, Khavari Daneshvar.H, Jamali.S,** (2011), Serologic evaluation of hepatitis B and D in patients with cirrhosis, AJMR, vol 5(5),568-571

APPENDIX

M-File for Hepatitis B Model without Vaccination

```
functiondy=model(t,y,beta,alpha)

dy=zeros(3,1); % a column vector

dy(1)= -alpha*y(1)*y(2);

dy(2)= alpha*y(1)*y(2)-beta*y(2);

dy(3)= beta*y(2);
```

M-File for Hepatitis B Model with Vaccination

```
functiondy=model(t,y,beta,alpha,k,p,mu)

dy=zeros(3,1); % a column vector

dy(1)= mu*k-alpha*y(1)*y(2)-mu*y(1)-p*y(1);

dy(2)= alpha*y(1)*y(2)-(beta+mu)*y(2);

dy(3)= beta*y(2)-mu*y(3)+p*y(1);
```

Scripts Used in Calling the M-File for Hepatitis B Model without Vaccination

```
alpha=1.0058;

beta= 0.984155;


options = odeset('RelTol',1e-9,'AbsTol',1e-9);

[T,Y] = ode15s(@sir,[0 12],[5000 1 0],options, beta,alpha);

subplot(2,2,1)

plot(T,Y(:,1),'.')

xlabel('Time');ylabel('SUSCEPTIBLE INDIVIDUALS');
```

```
subplot(2,2,2)
plot(T,Y(:,2),'.')
xlabel('Time');ylabel('INFECTED INDIVIDUALS');
subplot(2,2,3)
plot(T,Y(:,3),'.')
xlabel('Time');ylabel('REMOVED INDIVIDUALS');
```

Scripts Used in Calling the M-File for Hepatitis B Model with Vaccination

```
beta= 0.30417;
gamma= 0.2293;
mu= 0.21429;
k=0.5149;
p=0.1994;

options = odeset('RelTol',1e-9,'AbsTol',1e-9);
[T,Y] = ode15s(@sirV,[0 12],[4999 1 0],options, beta,alpha,p,k,mu);
subplot(2,2,1), plot(T,Y(:,1),'.')
xlabel('Time');ylabel('POPULATION OF SUSCEPTIBLE');
subplot(2,2,2), plot(T,Y(:,2),'.')
xlabel('Time');ylabel('POPULATION OF INFECTED');
subplot(2,2,3), plot(T,Y(:,3),'.')
xlabel('Time');ylabel('POPULATION OF RECOVERED');
```